This is a digital copy of a book that was preserved for generations on library shelves before it was carefully scanned by Google as part of a project to make the world's books discoverable online.

It has survived long enough for the copyright to expire and the book to enter the public domain. A public domain book is one that was never subject to copyright or whose legal copyright term has expired. Whether a book is in the public domain may vary country to country. Public domain books are our gateways to the past, representing a wealth of history, culture and knowledge that's often difficult to discover.

Marks, notations and other marginalia present in the original volume will appear in this file - a reminder of this book's long journey from the publisher to a library and finally to you.

Usage guidelines

Google is proud to partner with libraries to digitize public domain materials and make them widely accessible. Public domain books belong to the public and we are merely their custodians. Nevertheless, this work is expensive, so in order to keep providing this resource, we have taken steps to prevent abuse by commercial parties, including placing technical restrictions on automated querying.

We also ask that you:

+ *Make non-commercial use of the files* We designed Google Book Search for use by individuals, and we request that you use these files for personal, non-commercial purposes.
+ *Refrain from automated querying* Do not send automated queries of any sort to Google's system: If you are conducting research on machine translation, optical character recognition or other areas where access to a large amount of text is helpful, please contact us. We encourage the use of public domain materials for these purposes and may be able to help.
+ *Maintain attribution* The Google "watermark" you see on each file is essential for informing people about this project and helping them find additional materials through Google Book Search. Please do not remove it.
+ *Keep it legal* Whatever your use, remember that you are responsible for ensuring that what you are doing is legal. Do not assume that just because we believe a book is in the public domain for users in the United States, that the work is also in the public domain for users in other countries. Whether a book is still in copyright varies from country to country, and we can't offer guidance on whether any specific use of any specific book is allowed. Please do not assume that a book's appearance in Google Book Search means it can be used in any manner anywhere in the world. Copyright infringement liability can be quite severe.

About Google Book Search

Google's mission is to organize the world's information and to make it universally accessible and useful. Google Book Search helps readers discover the world's books while helping authors and publishers reach new audiences. You can search through the full text of this book on the web at `http://books.google.com/`

NYPL RESEARCH LIBRARIES
3 3433 06634374 4

Institute

TRANSACTIONS

OF THE

INSTITUTION OF CIVIL ENGINEERS

OF

IRELAND.

27TH SESSION, 1861-62.

VOL. VII. PART I.

DUBLIN:
JOHN FALCONER, 53, UPPER SACKVILLE-STREET,
Printer and Binder to Her Majesty's Stationery Office.

1862.

ML

Institution
VD

TRANSACTIONS

OF THE

INSTITUTION OF CIVIL ENGINEERS

OF

IRELAND.

27TH SESSION, 1861-62.

VOL. VII. PART I.

DUBLIN:
JOHN FALCONER, 53, UPPER SACKVILLE-STREET,
Printer and Binder to Her Majesty's Stationery Office.

1862.

Institution
VII A

TO NEW YORK
PUBLIC LIBRARY
195754A
ASTOR, LENOX AND
TILDEN FOUNDATIONS
R 1926 L

TRANSACTIONS

OF THE

INSTITUTION OF CIVIL ENGINEERS

OF IRELAND.

[January 8, 1862.]

M. B. MULLINS, Esq., Vice-President, in the Chair.

AN ACCOUNT *of the* CONVEYANCE *of* LIGHT-DRAUGHT STEAMERS *from* ENGLAND *to the* RIVER VOLGA, *with* REMARKS *on the* INLAND NAVIGATION *of* RUSSIA.—By C. H. MOBERLY, Esq., Member.

THERE are, as yet, few Railways in the Russian Empire. Numerous lines are now in course of construction, and when completed will greatly facilitate the transport of goods all over the country. Years must necessarily elapse before any material good can accrue from this cause, and even with the additional facilities thus afforded the bulky and heavy goods will still be conveyed by water.

The common roads of the country are so bad that they are only used for the transport of goods where no other communication exists, as, for instance, in the southern provinces, where incredible numbers of ox-carts, extending in file, far as the eye can reach, wend their way slowly to the sea-ports.

In the winter, as long as the snow thoroughly covers the ground, the roads are good, but this does not last very long; in Spring and Autumn they are impassable.

Thus the inland waters are the principal highways of com-

merce. Peter the Great, duly appreciating their importance, obtained the assistance of an English Engineer, and constructed the route about to be described. It passes through the lakes Ladoga and Onega, up the river Vitegra, by canal to the river Kovje, down it to the lake Beloe, down the river Tcheksna to the Volga at Ribinsk.

By constructing canals and clearing the river-beds of stones and rocks, a net-work of communications has been formed embracing European Russia; connecting the Black sea with the Baltic, by three routes; the White sea with the Baltic and Caspian, by two routes; the Baltic with the Caspian, by three routes.

In Russia all public high-ways are placed under the direction of the Minister of Public Works. The country is divided into districts (7 it is believed), the management of each is confided to a chief of the district, who has the rank of colonel or general. Each district consists of several divisions, administered by Engineers with the rank of captain or colonel, having a staff composed mainly of cadets from the Government Engineering Schools. These officers constitute the corps of Ways and Communications, and partly in consequence of the excellence of this organization, partly from the abundance of water, the systems of inland navigation are creditably maintained. The working expenses, and the cost of new works are defrayed partly from an endownment fund, chiefly by a tax of one-fourth per cent. on all goods shipped in Russia.

During the long severe winter the canals, rivers, and lakes are more or less frozen over. The navigation generally commences in April, as soon as the Volga is clear of ice, when numbers of tug steamers, towing from 500 to 3,500 tons of goods in barges from 200 to 400 feet long, leave their winter quarters and make their way to Ribinsk, where their freights are transhipped into smaller boats, capable of passing the locks and reaching St. Petersburgh.

The water which, in April and May, rises as much as 40 feet above its normal level, falls so low towards the end of June as rarely to allow any but the shallowest draught steamers to go to Ribinsk a second time. During the remainder of the season the bulk of the traffic goes to Nijnoi Novgorod, for the great fair. The depth of water on the sand banks is generally about 2 feet 9 inches above Nijnoi Novgorod, and 3 feet 6 inches below it as far as Kasan; below this town there is seldom less than 6 feet of water, except on two shallows where it falls, at times, to 5 feet. The range of the tug steamers is from Astrachan to Ribinsk, a distance of 1,750 English miles; whilst the highest station for passenger steamers is 300 miles above Ribinsk, at Tver, where there is a station on the Moscow and St. Petersburgh Railway.

Last year two fine steamers, built by Messrs. Samuda, and engined by Messrs. Penn, were put together on the Volga, for the postal service on the Caspian, between Astrachan and Astrabad in Persia, a distance of 700 miles. Thus, in the Summer, there will be regular steam communication from England, through Russia, to Persia, of which 2,750 miles consists of the navigation of the Volga and Caspian.

The number of steamers at present on the Volga is about 250, comprising an extraordinary variety of construction in hulls and engines. Many of them have been built entirely at the different establishments on the river; some have wooden hulls, but most are iron; some have been launched on the Kama, some in St. Petersburgh. Some Sweedish and Belgian boats have been sent in pieces, and put together on the Volga. A French Rhone steamer found her way from the Black Sea after the Crimean war. General Maltzoff, at his own iron works, has constructed 3 steamers, to some extent on the American model. The Netherlands Company, of Rotterdam, sent the first tug steamers to the Volga, 17 years ago, they

came in pieces and were put together at Ribinsk; they may be considered the pioneers of the fleet of tug boats that rapidly made their appearance on the successful issue of the enterprise being established.

Many steamers, some of them the oldest now at work, are of English build; with one exception they were brought out in pieces. The Enterprise, built in Dundee, got through by the Marienski canal route, but being larger than the locks, these had to be lengthened temporarily, by making timber dams across their entrances, below the lower gates. This attempt has never been repeated, probably on occount of the tediousness and cost. In 1858 a small iron Newcastle tug, built short enough to go into the locks was brought through. She steamed out from England, and it was only necessary to remove her paddle wheels and boxes on approaching the locks, The owners were so well satisfied with this experiment that they at once determined to order longer steamers, constructed in sections which could be easily disconnected, in order to get them through the locks. It was apprehended that the vessels could not be built strong enough to cross the sea on this principle, though it is easy to show that they can be made stronger at the connexions than at any other part. The real danger consisted in the length and lightness of construction required in such shallow draught steamers, and the only way to diminish the risk of crossing the ocean was to choose favourable weather, and engage careful and experienced captains.

Three steamers were ordered, two 185 feet long, and 22 feet broad, and 8 feet deep, with engines of 70 nominal horse-power; and the third 160 feet long, 26 feet broad, 8 feet deep with 140 nominal horse-power engines. Messrs. Samuda Brothers were contractors for the vessels, Messrs. Ravenhill, Salkeld, and Co. for the machinery. The conveyance of the steamers to their destination was intrusted to the author. Efficient captains having been secured for the sea voyage, they

started from Gravesend on 13th May, 1859. The two larger steamers made a fair run to Cronstadt in about 8 days, the smaller steamer, which was over-loaded, had to run into port twice for shelter, and reached St. Petersburgh in about a fortnight.

Having taken on board the Russian captains and crews, retaining however 2 English engineers and 2 firemen on each steamer, we started up the Neva on the 2nd of June. The rapids, situated half-way up the river are not dangerous; there is always sufficient water, though the channel is crooked and stoney. From Schlüsselburg, on the Ladoga lake, a canal leads round the southern shore to the river Svir, intersecting in its course the rivers Volchoff and Sias, each of which brings to it the traffic of the Volga by separate routes, the former, that of the Vichnivolotchok, the latter that of the Teechveenka. Avoiding this canal we steamed across the lake and entered the river Svir. The navigaton here presented the first difficulties we had to encounter. Though the general depth of the river is considerable, the bottom is studded with boulders, which are most numerous in shallow places, under a strong current, leaving a narrow and tortuous channel. This river is not regularly navigated by steamers, and the pilots, whose average run does not exceed 8 miles, were only accustomed to manage barges, so that our perfectly flat-bottomed keelless craft sorely puzzled them. The most dangerous rapid is at a place where the river takes a sharp bend, a radius of some 300 feet, rushing at a rate of 10 miles an hour over a bed of boulders, so distributed as to form a narrow channel, which at one point crosses the main current diagonally. At this point one of the pilots caused the engine of his boat to be eased, and the moment he did so the current caught the bows of the steamer, and in an instant she was drifted against a stone, swung round, and brought to a stand, head down-stream, with several holes knocked in her bottom.

By the exertions of the engineers, these were temporarily stopped, and the vessel got off in two days. On reaching the Onega lake we steamed across it, though the traffic is carried on by the Onega canal, which skirts its southern shore. We entered this canal at the east side of the lake, and proceeded by it, under steam (though this is contrary to law) a distance of 14 miles, to the river Vitegra; continuing up this for 7 miles we reached the town of Vitegra, just above which the first lock is situated, and here we commenced to disconnect the steamers.

The cabin linings were all so fitted as to be easily removed where necessary; the attachment of the paddle-boxes and sponsons to the ship's side was effected by bolts and nuts through the angle irons of the outer paddle beams, through the knees of the angle iron beams, carrying the flooring of the sponsons, and through the ends of the timber sponson beams. The whole was thus simply brought to the smooth ship's side. A deck-house rested on each of the forward sponsons, but being built complete in itself it could be lifted off entire. The inner faces of the paddle-boxes, which were of iron, were permanently secured to the ship's side, and carried the bridge board and steering wheel.

The brackets for carrying the outer bearings of the paddle shafts were of plate iron, likewise secured to their places with bolts and nuts.

The compartments of the vessels were likewise bolted together (Plate I). The water-tight separation bulkheads were secured to the plating of the vessel by angle iron frames, to which they were rivetted by $\frac{5}{8}$ rivets, 2 inches pitch, outside these $\frac{7}{8}$ bolts were placed, 4 inches pitch, from gunwale to gunwale, to bolt the compartments together. This connexion was thus made as strong as the ship's plating through the line of rivets.

The kelsons were jointed by strengthening the separation

bulk-heads over them with strong gusset-plates, rivetted to angle irons on the bottom plating, and securing them with two-inch bolts.

The gunwale stringers and binding strakes were jointed partly by $\frac{7}{8}$ inch bolts through the bulkheads, but chiefly by cover plates bolted on outside the joint, from the gunwale to the water-line.

The deck planking was laid in short lengths breaking-joint, each piece reaching to the first deck beam, on alternate sides of the separation; it was readily taken up.

It may here be observed that in these vessels, and indeed generally, the strength of the bottom is greatly in excess of the top, as will be seen by reference to the following table:—

BOTTOM.		
	Midships	Fore and Aft
	Square Inches	Square Inches
Keel,	88	7
Garboard strake,	27	$22\frac{1}{2}$
Other bottom plating,	70	45
Centre keelson,	$7\frac{1}{2}$	$7\frac{1}{2}$
Bilge keelson,	$3\frac{1}{4}$	$3\frac{1}{4}$
Sister keelson.	$3\frac{1}{4}$	0
	119	$85\frac{1}{4}$
TOP.		
Gunwale stringers,	$8\frac{1}{2}$	$8\frac{1}{2}$
Beam do.,	4	4
Sheer strake,	$11\frac{1}{2}$	9
	24	$21\frac{1}{2}$

The strength of the deck planking has been omitted, because the author thinks that it ought not to be taken into consideration, it, no doubt, gives a considerable amount of strength and stiffness when new, but as it soon rots, gets loose and unfit for any serious duty, the strength of the ship should be

independent of it. It is certainly true that the bottom should be made thick enough to bear running on stones at a moderate speed; no vessel can long be exempt from such accidents on the Volga, yet the disproportion between the top and bottom sections is so great that the question suggests itself, if the vessel would not have been much stronger if a portion of the kelsons had been removed and stringers of equal section applied at top.

Before disconnecting the compartments it was necessary to balance them, so that when set at liberty they should not greatly alter their immersion, or the angle of inclination of the keel, or in other words, as the centre of displacement of each section was not in the same vertical plane with its centre of gravity, it was necessary to load the bulkhead ends till this took place

Referring to the accompanying figure, let W be the centre of gravity of section, D centre of displacement, and w weight to be added, let a be the distance of W from D, and b that of w from D, then since the resultant of W and w is to pass through D

$$wb = Wa$$

$$w = \frac{Wa}{b}$$

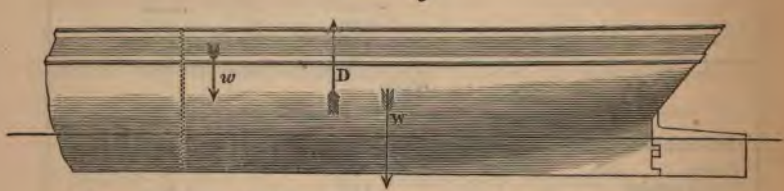

The position of the points D and W for the mean draught was obtained from the builders, also the weight of the compartment; these were, $W = 18\frac{1}{2}$ tons, 15 feet from bulkhead, D 11 feet from it, and the additional load was to be placed 3 feet from it, so

$$w = \frac{18\frac{1}{2} \times 4}{8} = 9\frac{1}{4} \text{ tons.}$$

This is merely a rough approximation, as the position of D varies with the immersion.

The several compartments were loaded according to the above calculations, and the points of the bow and stern being further eased from the other steamers, or, by shears and tackle, they were disconnected, floated and secured to each other by means of $\frac{7}{8}$ inch bolts, thus forming a strange-looking boat, and in this condition they were navigated through the locks. Wood plugs had been turned to fit the bolt holes, and as each bolt was taken out a plug was driven into its place from each side, so that little or no leakage took place.

Had strong barges, lying very low in the water, been procurable, it would have been a very easy matter to lift off the paddle-boxes. Nothing but very weak ones, however, could be got, and the gunwales of these had to be cut down to within one foot of the water line, making them so pliable that one ton placed in them, in any one spot, produced a sinking there of several inches. Under these circumstances the following plan was adopted: having obtained from the makers the weight of the several portions of the paddle-boxes, the author calculated the pressure on three points, A, B, and C, selected so that the structure would rest securely

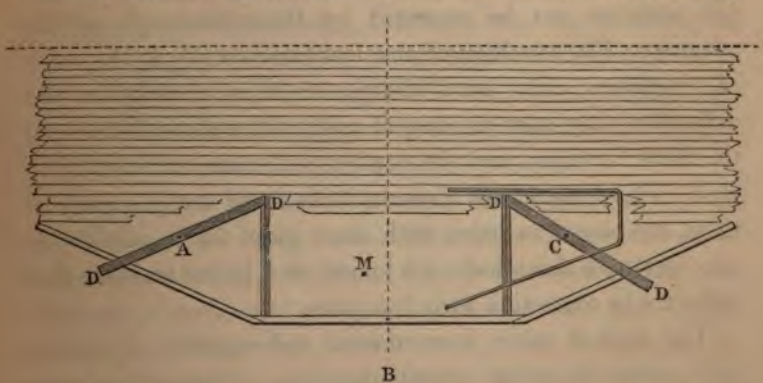

when supported on them; the barge was floated alongside the

steamer, under the sponsons. Balance weights were piled on the deck of the vessel next to the paddle-box to be removed, and on the opposite side of the barge, which was broad enough to receive both paddle-boxes. Beams, D D, were then placed under the sponsons, and the weight transferred to the barge by screw-jacks at A, B, C. The bolts were then removed, and the barge floated round to the other paddle-box, which was lifted off in a similar manner, the balance weight on board the steamer and in the barge being removed, as the weight was imposed on the latter. The brackets for the outer shaft-bearings, and the paddle-shafts and paddles were also placed in the barge. The paddle-boxes and sponsons measured 53 feet long over all. It occupied 14 days to disconnect the steamers.

The river Vitegra was originally a small, shallow, and in some places, a rapid and stoney rivulet, flowing out of the Matko, into the Onega lake. It has been rendered navigable, by the construction of 38 locks, between the town of Vitegra and lake Matko, a distance of 41 English miles. The total rise through these locks is 315 feet. The locks are all constructed entirely of timber, with iron fastenings. Everything is arranged very simply, and the work is rough, and such as can be executed by the work-people of the country. The condition of the locks does credit to the corps of Engineers, who have charge of them, considering the difficulties they have to contend with. The channel between the locks however, and the towing paths are not kept up so well. More than half of these locks occur singly—many of them are placed in pairs, with three gates for two locks—in two instances three locks are joined, and in one instance four locks are in connexion with five gates.

The level of water is maintained and regulated by sluices built across the stream at suitable places. The surplus water is allowed to run *through* these sluices, and *not* over a weir.

In the spring, whilst the water is rising from the rapid melting of the snow, all the sluices are opened to allow the stream, bringing numerous trunks of trees and pieces of timber with it, to rush through without injuring the works. There are 19 sets of sluices on this canal, most of which retain the water for 1 or 2 locks. One set, however, retains the water for 4 locks, at a height of 36 feet above the lower level, and another set acts for 5 locks, retaining the water over 40 feet above the lower level. The sluices themselves are only about 6 feet high; the remainder of the fall is divided into severel steps, over which the water rushes down. Some idea of the abundance of the supply of water, may be formed from the fact that a second set of 4 locks has been built parallel to the last-named 5 locks, to expedite the passing of vessels. The dimensions of all the old locks are about 107 feet between the gates, the width varies from 28 to 30½ feet. But some have already been, and all are to be built, about 155 feet between the gates, and 30½ feet broad. The depth of water on the sills is from 5 to 6 feet. Circumstances greatly favoured the execution of all these works. The navigation lasts for about six months, from the middle of April to the middle of October, so that during the winter half-year, the water may be maintained at its lowest level, by opening the sluices, and thus the repairs are rendered easy of execution. The soil is also sufficiently favourable for such works, being soft throughout. Some of the level portions of the stream are very boggy.

From lake Matko, which is the summit level, the Marienski canal (from which this whole route derives its name) is cut through the river Kovje, which has its source in the lake Kovje, and empties itself into the lake Beloe. A channel has been formed from lake Kovje to the Marienski canal, by means of which the water of the lake is used to maintain the requisite depth in the canals; for,

as this channel joins the canal *above* the first lock, the water flows either way, replenishing the lake Matko, as well as the Marienski canal. There are 10 locks on this canal, similar to the former ones, its length is 25 English miles, and the fall 60 feet. The river Kovje had to be descended for 50 miles, where, at a short distance from the mouth of the river, the Belosersk canal commences, and skirts the White (Beloe) lake, which is shallow and dangerous for barges; it is entered by 1 lock, with a rise of 7 feet. At 30 miles from this end of the canal and on the White lake stands Belosersk, one of the oldest towns in Russia, and supposed to have been one of the early capitals. It is now only notorious as the capital of all the ruffianly characters employed in hauling barges along this route. The canal is 42 miles long, and at the further end, a descent of 12 to 14 feet, through two locks, brings one to the river Tcheksna, which flows from the White lake to the Volga at Ribinsk.

These are the last locks to be passed, the total number on this route is therefore 51. From Vitegra to Belosersk, or rather to the river Tcheksna, the steamers were towed at first by men, and afterwards by horses.

No difficulty was experienced with the two end compartments, which steered perfectly well; but, the middle compartment, being in fact no better than a square box, was very troublesome, as it could only be managed by having lines from the after as well as from the forward end, and assisting with poles. Even then a fresh breeze stopped our progress, as the box became perfectly unmanageable.

Arrived in the Tcheksna, the end compartments were again joined to the middle one. The expediency of doing this was doubted very much, as we had to pass over a rapid at a very sharp bend, so that it was feared the ends of the steamer would touch on the stones, and touching would be tantamount to having a hole knocked through the bottom in a current of 8 miles an hour.

An examination of this rapid, however, satisfied the author that the square box would be much more difficult to navigate than the whole vessel, because the latter could be guided with comparative ease, round the bend with ropes, the length of the vessel giving the requisite leverage.

Having connected the compartments together, but leaving the paddle-boxes on the barges, we proceeded to perform the only dangerous portion of the voyage.

The river Tcheksna is 266 miles long, from the mouth of the canal to the Volga. The upper half of the river is full of granite boulders, rapids, and shallows. Either of these obstacles would give sufficient trouble by itself, but when, combined, as is generally the case on this river, the navigation becomes somewhat dangerous, and in fact, many barges are wrecked.

The worst places commence at 32 miles and 64 miles from the canal, the former consisting of a series of rapids, spread over a distance of 12 miles, whereas the latter extends over 4 miles only.

The steamers were prepared in the following manner to pass down the river. At the bow and at the stern, two sweeps, 40 to 50 feet long, were arranged, standing fore and aft, one on each side, by rowing with which, either end of the steamer was easily moved to the desired side. For propelling, we had 10 sweeps, 20 to 25 feet long, placed on each side, and each worked by one man. These arrangements were made by the pilots and their crews, according to their own wants. For each steamer 2 pilots and 40 men were engaged for the whole distance to Ribinsk.

Arrived at the first rapids, some difficulty occurred with the pilots, who are appointed specially to this distance of 12 miles, as they had never before taken such long vessels over them. Nor were they accustomed to consider it fatal to touch the stones, because the timber barges, generally in use here,

frequently come against the boulders, and being sufficiently thick, but very indifferently put together, they simply yield to the stones, bending as much as 6 inches in a length of 30 feet, without sustaining any greater injury than somewhat more leakage than usual. Fortunately there is always sufficient water here, though the channel is very narrow. Two more pilots and 80 additional men were added to each steamer. These men were divided into 4 gangs, each of which took one of four lines, one on each side of the steamer from the bow and the stern, which gave control over the speed of the steamer, as well as sufficient power for turning her round a very sharp bend of rather less than a right angle. The long sweeps at either end were also used, but not the short ones on the sides. And thus, with 4 pilots and 120 men for each steamer, besides our own crew of 10 men, we passed these rapids in safety.

The rapids at 64 miles from the canal were passed in a similar manner and as successfully.

In 1859, we passed these rapids towards the end of June, when there was 5 feet of water; but last summer the author, in charge of another steamer, arrived two months later,—viz., at the end of August, when there was only 2 feet of water, whereas the steamer drew 2 feet 1 inch. But as there was no chance of the water rising, the passage had to be attempted, relying upon the trustworthiness and efficiency of the pilots, which cannot be too highly praised. The steamer was carefully guided from one boulder to the other, for the pilots know their position very accurately, and lifted over them with a derrick and tackle, and the passage was thus again successfully performed.

The remainder of the voyage calls for no further notice, we reached Ribinsk in 6½ weeks, from St. Petersburgh, the distance being about 744 English miles.

In Ribinsk, the paddle-boxes and wheels were again

attached, and all the cabin work restored, which operation occupied about a fortnight. The steamers being then in as good a condition as when we started from London, we proceeded down the Volga to our destination.

APPENDIX.

THE PRINCIPAL CANAL AND WATER COMMUNICATIONS OF RUSSIA.

I.—Between the *Black sea* and the *Baltic* there are three routes, viz.:—

1. The ROYAL ROUTE (Koralefski).—From the *Black sea* by the *Dnieper*, *Pripet*, *Pina*, *Royal Canal*, *Moohavetz Western Booch*, *Narva*, *Bober*, *Neta*, *Augustin Canal*, *Chornagansha*, and *Niemen* to the *Baltic*.

2. The OGIVA ROUTE.—From the *Black sea* by the *Dnieper*, *Pripet*, *Yazogod*, *Ogina Canal*, *and Niemen* to the *Baltic*.

3. The BERESINA ROUTE.—From the *Black sea* by the *Dnieper*, *Beresina*, *Bereshta*, *Beresina Canal*, *lake Lepel*, *Oola*, *and Western Dwina* to the *Baltic*.

II.—Between the *Baltic* and *Caspian seas* there are three routes, viz.:—

1. The VISHNIVOLOCHOCK ROUTE.—By the *Volga*, *Tvertza*, *Oona*, *Vishnivolochock canal*, *Msta*, *Novgorod canal*, *Volkhof*, *Ladoga canal*, and *Neva* to the *Baltic*.

2. MARIA ROUTE.—By the *Volga*, *Tcheksna*, *Belosersk canal*, *Kovje*, *Maria canal*, *Vitegra*, *Onega canal*, *Svir*, *Svir canal* (crossing the Sias), *Sias canal* (crossing the Volkhof), *Ladoga canal*, and *Neva* to the *Baltic*.

3. TEECHVINKA ROUTE.—By the *Volga*, *Mologa*, *Chagodastcha*, *Govina*, *lake and river Volkhina*, *Teechvinka canal*, *lake Eglin*, *Teechvinka*, *Sias*, *Sias canal* (crossing the Volkhof), *Ladoga canal*, and *Neva* to the *Baltic*.

III.—Between the *White*, *Baltic*, and *Caspian seas* there are two routes, viz. :—

1. DUKE ALEXANDRE OF WIRTEMBERG'S ROUTE.—By the *Northern Dwina*, *Sookhona*, *Koobenski lake*, *Pavatzovitza*, *Blagovestchenski lake*, *Duke A. of Wirtemberg's canal*, *Sheksna*, and by the *Maria route* to the *Baltic*, or by the *Volga to the Caspian*.

2. CATHERINE'S ROUTE.—By the *Northern Dwina*, *Vitchegda*, *Northern Keltma*, *Catherine's canal*, *Southern Keltma*, *Kama*, *Volga*, and by the *Maria route*, to the *Baltic*, *or by the Volga* to the *Caspian*.

COMMUNICATION WITH SIBERIA AND KAMTCHATKA.

From *European Russia* all goods are conveyed to the *Volga*, from whence they are conveyed up the *Kama*, up the *Belaya* and *Tchasavaya* to the *Ural mountains*. From the *Tchasavaya*, along the ridge of the *Ural mountains*, to the *river Tagil*, down this *river*, and the *rivers Toona*, *Tobel*, and *Irtish*, up the *Obi* and the *Ket* to the *Makovski island*, whence 90 versts over land to *Enisëisk*, whence down the *river Enisëisk*, up the upper *Toongooska* to the *Baikal lake*, up the *Selinga* to the *fortress Troitzko Tsarsko*, whence again overland to *Kiachta*. Goods for *Kamtchatka* leave the *Baikal lake* by land for the *Lena*, down the *Lena*, up the *Aldan*, the *Maya*, the *Yoodoma* to the *Yoodoma Cross*, whence overland to the *Ochota*, and down the *Ochota* to *Ochotsk*, whence by sea to *Kamtchatka*.

[January 8, 1862.]

M. B. MULLINS, Esq., Vice-President, in the Chair.

Description of the MADRAS RAILWAY.—By T. H. GOING, Esq., Foreign Life Member.

IN offering a paper on the Madras Railway, my design is not to produce either a scientific or statistical essay, but to give such a general description of its leading features, physical and constructive, as an acquaintance of more than four years, enables me to offer; trusting that, at least, the novelty of the subject may invest it with some interest to those who have had no personal experience of Indian engineering.

Madras was the latest of the three Indian Presidencies in entering upon the construction of railways; the first having been inaugurated in the summer of 1853. This is now known as the south-west line, and was originally commenced without any well defined idea as to its ultimate direction, beyond a general one, that an easterly course was undesirable, owing to the presence of an ocean on that quarter—a direct northern one not offering many inducements, either as regards the richness of country or its physical adaptability. Why a southern start was not given to this first essay is not so easily explained, since in that direction lies a country of extreme fertility, thickly populated, and with everything to recommend it from an engineering point of view. There were, no doubt, reasons for this as potent as those which swayed the judgment of the Government advisers, who, when they *had* selected the south-west route, were careful that such large towns as were linkable in the regular course of a railway should be scrupulously avoided. Probably fearing, like the Sybarites of yore, lest the shrill notes of the steam-cock should disturb the peaceful slumbers of the inhabitants.

Thus treading its unsocial course along, the south-west line at length reaches a point on the western coast known as Beypoor, where the terminal works are erected. Not that Beypoor can boast a harbour superior to any other river-mouth along the coast—for they all, more or less, share alike the natural effects of sand-bearing currents, which, checked by the action of the south-west monsoon, create a bar across their entrances. There is not a harbour along the west coast, from Cape Comorin to Bombay, which can afford security to vessels of any considerable tonnage, except, perhaps, Seedashaghur, where a barrier of coast islands might be so connected, by artificial means, as to constitute a good harbour, sheltered from the effects of this reflux of sand. Beypoor is, in fact, an open roadstead, and was probably selected for the terminus by the influence of the iron company, whom the existence of extensive beds of rich hematite in this locality called into being some years back, and whose works, now in a semi-ruinous condition, stand as a costly proof that, in the absence of a local supply of fuel, the manufacture of iron is not a profitable speculation. Yet, should the screw-pile pier, at present in course of erection at Madras, prove a success, no doubt its adoption at Beypoor would follow; and it is impossible to over-estimate the advantages, both social and political, which would result from the connexion by rail, of two efficient harbours, one on the west, the other on the east coast of the peninsula.

For many miles after leaving Madras the line traverses a flat country of no great geological interest. Everywhere beneath the soil the great underlying stratum is decomposed granite, which becomes more and more consistent in proportion to the depth,—as may be readily observed in the deep wells, for irrigation purposes, so frequent in Indian cultivation, —till it finally merges into solid rock, yielding only to the quarryman's art. These sections would lead one at once to

conclude, from the texture of the material and veins of chloride, quartz, &c., which they display, that this decomposed stratum is the result of decay gradually advancing downwards with the lapse of time, and do not anywhere indicate the character of drift.

When undulations of the surface of the ground necessitate railway cuttings it is generally found that the nucleus of the cutting is the ridge of a greenstone dyke, of which the upper portion is more or less decomposed. It may be supposed that in a country of this character, clays, valuable for pottery uses, will be encountered, as, indeed, is the case; and the railway cuttings have laid bare some fine deposits of cayolin and other clays, which are turned to useful account in the School of Arts at Madras.

Further west, near the Poiney river, gneiss rocks begin to show, diversified by numerous trap-dykes and granite veins of all sizes. This character continues till within a few miles of Salem, where the line cuts a bit of ground intersected by veins of carbonate of magnesia, the so-called "Chalk hills." Near Sunkerry Droog, and, again, near Coimbatore, it crosses some not very extensive bands of metamorphic limestone. Some of the officers of Doctor Oldham's staff are now* engaged upon the geology of this part of the country; and, up to the present time, they have not met with either the carboniferous limestone or dolomite, nor has a single fossil been ever found in this region. It has not, however, been properly examined as yet. Further south, in the Trichinopoly district, they have made a splendid collection of fossils, from the carboniferous limestone, which now adorn the Geological Museum of Calcutta.

The great geological feature along the eastern part of the line is the magnetic iron hill near Salem, close to the

* June, 1862.

southern slope of which the line runs for about six miles. The ore from this hill supplies the Porto Novo Iron Company.

The next remarkable feature in the geology of the railway, as we proceed westward, occurs after crossing the Cauvery river, and approaching the foot of the great triangular spur of the western Ghauts, known as the Neilgherry hills, round the southern skirt of which the line curves towards the west coast.

These hills are a solid mass of gneiss, cut up with dykes in all directions; and the railway through that district has the same tough substance to encounter in many of its cuttings.

There is a peculiar deposit known as laterite, which occurs indiscriminately in all parts of southern India, and is probably not referable to any special geological period, but which reaches its greatest development on the western coast, where it may be seen composing the entire mass of hills, some hundreds of feet in height. It may be described as a gritty, porous clay, indurated by ferruginous infusion. It is massive and easily worked, though at the surface very hard for some inches in depth. It is used for building purposes in the place of bricks (as the derivation from Later might suggest), being cut out in blocks, which are further shaped by means of a hatchet. Of course, in a climate subject to frosts, the use of such a material in building would be out of the question; and even in India I do not think it can be considered as a material of sufficient durability for railway building, except it be for stations and small drains. It is also used as ballast.

From the foregoing remarks it is evident that there is no lack of good material for railway construction across the southern peninsula. Even throughout the plains of the Carnatic there are few localities in which a granite quarry, within tolerably accessible distance, may not be looked for. I am acquainted with instances where the mere stripping of

the soil for a few inches of depth reveals the surface of a granite plane many acres in extent. I am not aware whether it may be considered as one of the characteristics of granite, that near its surface it is disposed in successive layers, analogous to the coats of an onion, or whether, when such a character is observed, it should not be rather attributed to the effects of aqueous deposit than the action of cooling. It is certain that the so-called granite of Madras Presidency may be thus raised in successive layers of varying thicknesses, and hence I am doubtful whether it should not be regarded as gneiss.

Should, however, the more solid building material fail, there is always available on the plains an abundant supply of clay to make the brick—well-beloved of Indian Engineers of the Public Works Department—well-beloved, too, of the mild Hindoo mason, whose scantily developed muscle somewhat shrinks from the rough practice in stone, so hard, so heavy, so incapable of a sly-face finish, to smooth over any inherent defects. Famous bricks, too, have been made in India since railways have introduced English Civil Engineers. For Government works, the bricks are usually but half burnt; and, to smother up bad work, it is the custom to finish off with a handsome coat of plaster. It is not to be wondered at if bridges thus constructed resolve themselves into their original elements—it may be the first or it may be the second monsoon of their existence. Indeed, the first essay in all Government bridges would seem, as a general rule, to be merely regarded as an experiment. Bridge No. 2, constructed on the ruins of the former, will probably be better adapted to the requirements of the locality, and, perhaps, more carefully built, should it be within easy access of the Engineer of the district; but since his professional supervision may extend over an area of country as large as the Principality of Wales, it is more likely that a native maistry will have the management

of the re-erection, and that he will put up a second bridge the counterpart of No. 1. This is no exaggerated picture of the manner in which the public money is squandered in Indian Government works.

The mode of quarrying granite in the Madras Presidency is peculiar, and a description of it may be interesting to those unacquainted with the process.

There is in India a caste of people known as wudders, whom I may, in general terms, describe as the navvies of India. They are of two classes—those who work in stone, and those skilled in the manipulation of earth.

The stone wudder is a hardy, sinewy fellow, whose stock in trade consists of a house, which, when on his travels, he transports on the back of his donkey, or else on the head of his wife (no remarkable instance of tyranny, since it consists of nothing but a mat and a few bamboo stays); then he has a heavy crowbar, a few iron wedges, some earthen pots, a dog, and a small stock of rice. He is, in fact, a being a good deal resembling the Irish tinker of times not so ancient but that we can recall the picture. Arrived at his quarry, his first care is to lay in a stock of firewood, which he cuts in the jungle, and removes by means of a peculiar bandy or cart with low wheels of solid timber, drawn by a pair of buffaloes, an important part of his equipment, which I omitted to include before in the list.

The wood is piled in small quantities on the surface of the rock, and ignited, usually during the night, their favourite time for work. After the fire has been steadily kept up for some hours, the upper layer of the rock expands sufficiently to produce a separation from the substratum. The separation is accompanied by a dull bursting sound; and the extent of the severance is ascertained by a series of taps with the crowbar, the response of which is conclusive to a practised ear. The next operation is to break up this loosened bed of rock into

fragments of a size convenient for handling, and this is effected by means of a round boulder of greenstone, as large as can be lifted to his head with the assistance of another man. This he dashes down with all his might on the rock, and sometimes succeeds in making a fracture with a single throw; but it often requires to be repeated many times; and it is wonderful, considering the clumsiness of the method, with what success he turns out handsome square blocks of stone, of dimensions well suited for building. This, however, is more to be attributed to the natural tendency of the stone to square fracture than to the skill of the wudder.

The earthwork of Indian railways is performed by a different process from that usual in England, where the quantities in cuttings and embankments are commonly so proportioned that the material taken out of the former may be sufficient to construct the latter. In India, however, the value of human labour is low,—a man's wages on the Madras Railway being equal to 3d. per day, and a woman's to 1½d.—the value of land is also small; and for these two reasons the system adopted is, to spoil the cuttings and make the embankments from side ditches. The use of wheelbarrows, too, is ignored, their representative being a flat withe basket, holding about two cubic feet. These are filled by means of an implement called a mommoty, which may be described as a large hoe, with a short handle, and, being lifted on to the heads of the women, are by them carried to the bank. It is surprising how fast this process raises a pile of earth. The worst of it is, that a bank made in so loose a manner is liable to settle for a long time. It has been often attempted to introduce the wheelbarrow mode of work, but with little success. The basket of antiquity—probably antediluvian—still holds its own. I have heard of an instance of an enthusiast in wheelbarrows who, having exhausted his morning energy in the fond endeavour to reclaim a gang of coolies from the use of the

objectionable basket, had the mortification, on making his evening tour of inspection, to find them carrying the wheel-barrows on their heads, in the belief that it was only a convenient modification of the principle.

The greater part of the earthwork in Madras Presidency, on the railway, in tanks, &c., is done by people of the same caste as the stone wudders whom I have described; and these people always perform their work by contract.

In speaking of the materials for construction, a few remarks respecting lime will be proper. I have alluded to the slight development of limestone in the Salem district; but for burning purposes the concretionary carbonate of lime, common through Madras, is most used. In this form it occurs in beds of varying thickness, as well as disseminated through the soil and over the surface of the ground. The nodules are of various sizes, from that of a pumpkin down to the bulk of a pea. A very common variety is shaped like the ginger root, and this I have always found to possess slightly hydraulic properties. In the neighbourhood of Madras, as well as on the west coast, almost the only kind of lime used is procured from the burning of shells found in beds a little below the surface, in low lands near the sea coast. The lime made from these shells being very fine and white, is admirably suited for plaster, and is susceptible of a high polish, which is administered during the period of its setting, by means of a smooth stone or crystal, rubbed assiduously over the surface so long as any dampness remains, a little of the powder of soap-stone being sprinkled on to assist the polish. Most of the public buildings, as well as private dwellings, in Madras, are finished in this way; and when the work is new it gives the effect of white marble. The action of the atmosphere, however, soon tarnishes the exterior of buildings thus finished, and they look shabby enough after three or four seasons; but the interior preserves its beautiful purity of appearance.

The Teloogoo name for lime is chunamboo, hence the term chunam, by which the various kinds of carbonate of lime known in India are designated. When calcined, it is still called chunam; and even after the combination of the resulting oxide with water and sand has converted it into what in England we call mortar, the universal name, "chunam," is its only designation. In the calcined state chunam is much used by the natives as a masticatory, being rubbed on the leaf of the betel vine, which is then folded up and chewed, the juice being swallowed.

It may be in place to observe, while speaking of lime, that that used for building purposes in Ceylon is all produced from the calcination of coral. Indeed, on the coast, the buildings are mostly constructed of coral blocks, cemented by mortar of lime made from coral.

The average annual fall of rain in Madras, on the eastern side of the peninsula, is about 50 inches; but as much as 80 inches have been registered as the fall for 3 several years since the commencement of the century. Within a single month the rain gauge has indicated a fall of 42 inches; and on the 25th of October, 1857, 12 inches of rain descended from the clouds in a steady pour of 12 hours' duration.

From these data it will be understood that the question of drainage is one of some importance in the construction of a railway across such a country.

The rivers, indeed, constitute the principal difficulties to be overcome; all the more so from the fact that being, during the greater part of the year, little more than broad shallow channels of sand, the great proportion of their duty is concentrated into the short space of a few weeks, during which the rains of the north-east monsoon descend. Those of the west coast must, however, be excepted from this general description, because the cloud-barrier of the western Ghauts, whilst arresting the eastward progress of the south-west mon-

soon, pours back its deluge of waters to the ocean which washes the shores of Malabar; so that while this vapoury region monopolizes all the waters of that monsoon which comes laden with the moist breath of the Indian ocean, the Coromandel coast must content itself with such watery stores as are picked up by the north-east monsoon in his shorter flight over the bay of Bengal. A corresponding difference of climate accordingly characterizes the country on the two sides of the western Ghauts.

Innocent of water as these sandy channels of the east appear, however, when the question arises of laying the foundations of a bridge, this uncompromising element is found but to lie dormant within a few inches of the surface of the sand.

Various means of sinking foundations are resorted to by Indian Engineers; a favourite one is that by wells. Thus, over the site of the pier or abutment are built a series of circular brick wells, about 3 feet interior diameter. They are placed side by side, and in sufficient number to cover the area of the foundation. Being built to the height of 3 or 4 feet, a diver gets into the well and commences excavating the sand beneath his feet, and hands it out in a basket. As he excavates, the well sinks; and when it reaches nearly to the surface of the water additional courses of brick are built up; and so on, successively, as the well sinks, the diver being obliged to fill his basket under water when the process of sinking has brought him beyond his depth. Finally, a second diver stands on his shoulders to assist his descent. The wells being sufficiently sunk, the intervals and spaces contained between contiguous wells are filled with broken bricks, mixed with stiff clay, to within a few feet of the surface, and rammed hard. The tops of the wells are then removed to the level of this rammed surface; and, as soon as the water has been reduced by means of baling-baskets, the first courses of the foundation are laid with brick cubes, previously got ready by

cementing together in this form a number of ordinary sized bricks.

By means of these cubes the work is rapidly carried above the water level; and from this point, or perhaps a little below it, the ordinary brickwork begins.

When the depth of sand is very great, and water difficult to overcome, this is a cheap mode of evading the necessity for cofferdams and pumps. Of its efficiency, however, as practised in Madras Presidency, I have some doubts, as it is not usual to sink the wells below 10 feet, and the scour of floods in the Indian rivers often reaches beyond this depth. In Bengal the same system is adopted, but they usually sink their wells till a hard bed is reached. The Engineers of the Madras Railway have not taken kindly to this Indian mode of founding; and it has been only resorted to in a few instances. In laying the foundations of the granite bridge over the Naggery river, of 13 forty-feet arches, on the north-west line of the Madras Railway, the Resident Engineer, Mr. Smart, (who, by the way, was a student of the Engineering School of Trinity College), adopted the method of curbs. I can describe the *modus operandi* for the first pier, having been present during the sinking process. The curb consisted of a strong teak frame, 40 feet by 9 feet, divided by cross scantlings into 5 compartments of 4 feet square, and equidistant. The thickness of the curb from under side of beams to upper surface of planking was 2 feet. It was placed accurately above the site of the pier on the surface of the sand, and the masonry built to a height of 10 feet, making an entire height, including the frame, of 12 feet, this being the depth of sand above the solid substratum as ascertained by a pricker. Cross walls partitioned the structure into 5 cells, corresponding to the compartments of the curb on which it was built, and every course of the upper 4 feet had layers of hoop-iron worked into it longitudinally. It was then ready for sinking, a process similar to that

described for the wells, a diver being set at work in the bottom of each cell to remove the sand and hand it up by lifts to the top, where it was discharged. The sinking, too, was found to be greatly facilitated by keeping the sand well cleared away round the exterior. After being sunk some feet, a crack appeared in the masonry, which alarmed the divers, and it was with difficulty they could be got to proceed with the work. The structure went down in sudden jerks of a few inches at a time, and was finally deposited on its resting place below the sand within 10 days from the commencement of the sinking; and though a few cracks showed in the masonry, it was of no practical consequence. The total cost of the curb, for materials and workmanship, was about 130 rupees, and the sinking cost 90 rupees; altogether 220 rupees, or say £22.

The cells were finally packed with stone, which was then grouted, and a level platform thus prepared for the superstructure.

Such a mode of getting in foundations would, of course, be only practicable where the sand was free from boulders.

The principal rivers crossed by the south-west line are the Cortiliar, the Poiney, the Goriathum, the Palar, the Cauvery, the Thootha, and the Kuddulhoondy.

It was originally contemplated to cross all these rivers by means of arches of masonry.

A great improvement has, however, been introduced by the substitution, in many cases, of wrought iron girders, whereby the number of costly and tedious pier foundations is diminished.

The total length of the south-west line, from Madras to Beypoor, is 405 miles, and the summit height attained at Mooroor, near the foot of the Shervaroy range, 1,500 feet above the level of the sea. At Coimbatore, where it passes near the base of the Neilgherry range, a second summit of 1,301 feet above the sea is attained, and between these two intervenes the deep valley through which the rapid Cauvery

washes its way southwards. The elevation of this, at the point of crossing above the sea level, is only 495 feet. The gradients are, for the most part, favourable, the maximum being 1 in 60, necessitated in descending from the last named summit towards the plains of Malabar.

I have hitherto only spoken of the south-west line of the Madras Railway—as being that for the construction of which the Company was originally raised, and which is now nearest to completion.

In August, 1858, the Government entered into a further contract for the construction of the north-west line, which is designed to strike out from Madras in as direct a course as is expedient, towards Bombay, and form a junction with the railway from that town, near Moodgul, in the territory known as the Raichoor Döab, lately restored to the Nizam of Hydrabad. Two branches, one to Bangalore, the other to Ootacamund, have also been sanctioned; but construction has only been commenced on the former, the object of these lines is to give ready access to two such important stations. Bangalore being the great military head quarters of Madras Presidency, and Ootacamund its sanitorium.

The railway of greatest imperial moment, however, in southern India, is the north-west line. Any one who will take up a map of India and trace a pencil line from Madras, through Cuddapah, Gooty, Bellary, Sholapoor, and Poonah, to Bombay, will immediately recognize a route, which, as affording the most direct communication between the seats of Government of the two western Presidencies, and passing through military stations of great importance, would naturally suggest to the rulers of the country the expediency of fitting it with a railway, so as to secure those strategical advantages, which, however such writers as M. Streubel may decry them, as tending to relax the energy and enthusiasm of the soldier, yet were proved to be eminently attendant on a railway system

during the operations of Lord Clyde in suppressing the mutiny of 1857.

There are many other considerations, too, which greatly enhance the importance of these trunk lines to India. Prominent amongst these might be mentioned the great reduction of troops which would be rendered possible under the improved means of transportation; the exemption for European soldiers from those long, fatiguing marches, which, under an Indian sun, are so disastrous in their effects; the reduction of the enormous camp equipage; the carriage of troops at an extremely low fare; and of the mail without charge, as provided for under the system of Government guarantee; besides many other desiderata in the economy of governing. But these questions are not within the scope of my subject. It must, however, be a matter of surprise to those who can appreciate the advantages accruing from railways, that the Government of India should not strain every nerve to effect a speedy completion of the north-west line, instead of checking its progress, as they have recently done, through mistaken notions of economy.

On this line the bridges, again, constitute the chief engineering difficulties. There are 12 principal rivers to cross; among which the largest are the Naggery, Cheyair, Paupugnee, Chittravutty, Penair, Hugry, and Toongahudra; the channel of the Cheyair being some 60 chains across, and the others varying from 10 to 40 chains; making an aggregate of bridging over these 12 rivers alone of more than three miles in length. The designs are principally for masonry, piers, and superstructure of wrought-iron girders, in spans of 60 feet, adapted for a single line of rails. The cuttings and embankments, too, of the Madras Railway are, I may observe, all adapted for single line, the masonry being constructed for a double line.

The total length of the north-west line, to its junction

with that from Bombay, is 330 miles. Two ranges of hills are crossed; the first, at Ballapilly, involving a heavy cutting through quartzite, and a gradient of 1 in 60. For about 130 miles the earthwork is tolerably heavy; but to the north of Cuddapah the great plains of black cotton soil prevail, and the earthwork will, consequently, be light.

The permanent way is formed of seventy-five-pound rails, and cast-iron sleepers, with tie-bars. The gauge is 5 feet 6 inches—the standard for Indian railways.

The south-west line was laid with sleepers of the country timber; and though some varieties of this are extremely hard and tough, yet experience proves that there is no timber capable of withstanding the ravages of the white ant, or the effects of dry rot in this climate. Teak is the only timber whose use in sleepers has been attended with partial success. Even the English oak treenail becomes converted into a brittle substance, resembling charcoal, after little more than a year's exposure to the weather.

The renewal of such a road is very costly; and in all cases of renewal, on the south-west line, the cast-iron sleeper is being now substituted for the timber one.

The first 96 miles of the south-west line, open on the east coast, have cost for construction, and including permanent way and rolling stock, £8,500 per mile.

The north-west line, so far as at present constructed, with a permanent way of much greater original expense, has cost only £7,000 per mile.

The public works executed in India have long been conducted under the authority of a special department of Government; the engineers being, for the most part, supplied from among such of the officers of the army as are able and willing to submit to the slight preliminary ordeal required to fit them for the service. The greater number are selected from among the engineer corps and the artillery; their subordinates chiefly

from among the ranks of the sappers and miners and the artillery; and the lower grades are made up from among the native community. The labour is performed by coolies working for daily wages, occasionally by means of convicts, and in some instances, small contracts are entered into.

In imitation of this organization of the Public Works Department some of the Indian railway companies have adopted what is called the departmental system, under which the work is executed without the intervention of contractors, whose duties, in addition to their professional ones, the company's Engineers undertake to perform.

A good deal may be said in favour of this mode of working in the early stages of railway construction in India, where, owing to the character of the climate, want of local experience, and other causes, it might be difficult to find English contractors willing to enter upon such a speculation. Besides, it may be urged that if the Company can perform by their own officers the work usually committed to the agency of contractors, is it not a clear saving of the per centage which the latter would calculate on in return for their labour and outlay?

This looks true enough; and, under certain favourable conditions, would undoubtedly follow. These conditions, involving as they do, for the most part, questions connected with the general management of the Company's affairs, are not suitable for discussion here.

There is, however, another important condition to its success which may be alluded to. It is, that the Engineer should not have a larger amount of work placed under his charge than he can do justice to.

In India, where skilled labour is scarce and of an inferior order, efficient overseers extremely difficult to procure, and dishonesty and peculation universal, an extraordinary amount of energetic supervision is incumbent upon an Engineer, who,

placed upon a district so organized, would do his duty conscientiously.

The length of line under construction, committed to the charge of an engineer on the Madras Railway, ranges from 20 to 25 miles. It is true that with an efficient staff of subordinates, it would be quite possible for him to perform the duties of field and office, even with all the accessary functions of providing work-people, apportioning, managing, and paying them; preparing and distributing plant; keeping it in repair; teaching and training overseers, mechanics, &c.; regulating a detailed system of accounts; guarding and disbursing immense amounts of the bulky silver currency; maintaining a harassing cross fire of office correspondence; but above all, exercising that untiring vigilance over the work in progress which the apathy, carelessness, and deceit of the Hindoo workman renders so indispensable.

Subordinates capable of relieving the Engineer of a portion of these labours are not, however, available in India, except to a very limited extent. On his own energy and bodily vigour, therefore, are mainly dependent the successful progress of his work—as many a zealous officer of the Madras Railway has discovered at the expense of health. This, however, is an instance of the abuse of the departmental system. No practical person can doubt that, were the energies of the Engineer limited to a distance of half the length (or say 10 miles) the cost of the work would vary in the same proportion, and its rate of progress and improved quality, inversely.

As railway construction progresses in India the contract system of work becomes yearly more popular, though on a much smaller scale than that usual in other quarters of the world. Wealthy natives may be always found, ready to undertake a limited amount of work by contract; they are, however, slow to embark capital, and have, generally, to be assisted with plant. Their ignorance of mechanical appliances

is another bar against any very elaborate essays of this kind. This, indeed, is a disqualification which gradually diminishes as our workshops extend their practical lessons; and there is every reason to expect that native contractors will perform the greater portion of all future railway construction in India.

I may mention that a company, composed entirely of natives, is at present raising a subscription to construct a line of 18 miles in length, from Arconum, the junction of the north-west and south-west lines of the Madras Railway, to Conjeveram.

Such an evidence of the beneficial tendency of the introduction of railways into India, towards developing the dormant capabilities of its people, must be as gratifying to the statesman as to the philanthropist.

[February 12, 1862.]

M. B. MULLINS, Esq., Vice-President, in the Chair.

On the RELATIVE ADVANTAGES *of* VARIOUS FORMS *of* PERMANENT WAY, *used in* IRELAND, *especially with reference to* MODE *of* FASTENING JOINTS.—By JAMES PRICE, Member.

THE consideration of the best form of permanent way is a subject of growing importance to railway engineers. The vast extent of railways now constructed in the British Isles must direct attention to the perishable part of their construction, viz.: the permanent way, the renewals of which require a larger expenditure than is likely henceforth to be spent in the primary construction of new lines, and which outlay must be met by the revenues of the shareholders, whose sensitive pockets will soon indicate how much care and thought their engineers have devoted to this subject. Any defects in the permanent way at once produce damage in another very costly

part of the concern, viz.: the rolling stock; again, the safety of the line is mainly dependent on the absence of such defects, as also the comforts of the travellers, whose luxurious moods, put on for the occasion, should not be ruffled by irritating jolts, fatiguing to the body, and confusing to the brain, and what not; to encourage travelling and increase receipts we must have our railways steady and smooth. It is not proposed to bring before you anything very new, or much theory on this essentially practical subject, though there is no doubt that correct theory, based on observation, leads to improving results, and directs the channel in which this, as all other, practical subjects should move, without limiting their necessary latitude; but it is my object to bring forward my views and experience, that it may draw out from others theirs in return, either to controvert or otherwise, so the matter may be properly viewed in all its lights. I have often found in engineers a notion that permanent way is a thing so simple, and brought to such perfection, that there is hardly any need for the many improvements coming out from time to time. After the many difficulties in making a line—first procuring the Act; then those serious engineering difficulties; want of funds; unsatisfied landholders and owners; bad foundations; sinking bogs; &c.;—being overcome; large spans crossed; proper ballast procured; when the rails, straight and symmetrical, the result of English skill, and coal, and iron, and the sleepers, square and new, appear, the permanent way seems a perfection; and yet it has often the greatest imperfections, and, greater than all, it belies its name, and is not at all permanent, whereas the other works generally are, or should be so.

Of all parts of a railway, the rail, which is its very essence, bears the brunt, and, along its edge, receives the shock of that ponderous machine, whose roll is like the track of an earthquake; stand at the nearest distance for safety from a dashing express, and consider that mankind is enjoying himself within

that avalanche, and look below at what directs the mass—bears its weight, and, in many cases, receives undoubted blows; one may thus, for a moment at least, realise the awful responsibility placed upon those narrow bars, and mouldering sleepers, called the permanent way. In considering the rails, we must be struck by the rapid advance made in the process by which such a mass of iron, and that not of a very malleable description, can be rolled out to such a length as is at present attained; the length of rails have gone through many stages, from the 3 feet metal plate to 12, 15, 18, and even to 30 feet. I know not whether this length has been exceeded. How greatly this must lessen the cost of maintaining lines, from the diminution in the number of joints, is evident: as it were to compensate for this, the weight of engines have proportionally increased—from the Rocket, the father of all engines, 6 tons, to the present, 30 tons—and so must add to the wear and tear; even small engines, looking so light, such as tank engines, are found to contain, compactly put together, a great mass of iron, and, standing on a short length, they severely test permanent way, and bridges.* While on this part of the subject, I may mention that some information is much required, as to how much of the weight of engines is borne by each pair of wheels, and the best way of apportioning their weight; the weight upon the leading and trailing wheels will always be in a given proportion in the same engine, but the actual amount varies with the strength of their springs, as compared with those of driving wheel.

A rail on cross sleepers is unquestionably a girder; on longitudinal sleepers it is not so, and is, or ought to be, supported equally throughout. As to the relative advantages of each, it appears that most engineers are in favour of cross sleepers, and

* This increase of weight is, in a measure, due to the greater thickness of the iron in the boiler, required by the change from the use of a pressure of 50 to 60 lbs. to that of 100 to 150 lbs.

not without good reason. On longitudinal sleepers the rail must be at least strong enough to carry the load over a short space, otherwise the slightest failure in the timber would lead to the breaking of the rail, and a very slight increase in depth will make it strong enough to span the usual spaces of cross sleepers. Again, we are more certain that the rail bears at equal intervals, and that its supports are equally unyielding, from the packing being confined to the ballast under the cross sleepers; for my part, if I have a girder, say for a bridge, strong enough, I would prefer that the abutments were equally unyielding to any uncertain support all along under the girder.

Above all other considerations in favour of cross sleepers is the certainty that the gauge and cant of the rail are truly preserved, there are many other reasons in favour of cross sleepers, such as better drainage, easy removals, and facility for using native timber, which are merely necessary to mention. I will therefore speak of the rail as a girder, resting on supports at regular intervals; it might be as well, in the first place, to inquire what these intervals should be, perhaps this is a matter not at all attended to, and yet of the utmost importance; it has struck me as remarkable that, whereas there is such a difference between the strength and stiffness of various rails, from a low bridge rail, 3½ inches high, to a high double-headed or girder rail, 5 inches deep, the spaces of sleepers are, in every case, 3 feet; it seems as if it were all done, not by rule of thumb, but by rule of legs or paces; in the case of a stiff rail, by adhering to this rule, there is not only a waste of timber but a positively worse line; many may have remarked, in going over a line where a deep rail is used, a hardness which it is not easy to account for, this hardness is found to be not only unplesant but injurious to rolling stock, it is in reality a vibration vertically; if we suppose the driving wheel of an engine to stand immediately

over a sleeper, there will be a depression occasioned by the compression of the timber and yielding of ballast, which let us call x (Plate II., fig. 5); then let the wheel move to centre of space between this and another sleeper, it is quite plain the weight is now borne equally by each sleeper, and the depression of each will be a, and the depression in centre will be $a+$deflection of rail; therefore the deflection of rail should equal $x-a$; (a being the depression which would take place under half the load, always greater than $\frac{1}{2}x$;) in order that the whole may move on a straight line, and not on a line having a vertical undulation, if the depression is equal when weight is over sleeper and when in centre of interval, it will be nearly so for any points between; if these conditions be not fulfilled it is evident there will be an undulating line of motion, as illustrated. (Fig. 6.)

This is no doubt of small variation from the straight line in ordinary roads, but when a train is moving at about 40 miles per hour, it rises and falls 40 times per second, which is a considerable vibration for such a mass to undergo; the springs modify this effect. This can be easily remedied by altering the spacing of the sleepers. Having tried experimentally what takes place, by setting a level to bear on indices fixed on the rail in the above-mentioned positions, I found in case of a girder rail of this section I $4\frac{7}{8}$ inches high, that the rail was too stiff for the spacing of 3 feet, the sleepers being 9 inches by $4\frac{1}{2}$, and that a better road would be made by spacing sleepers 3 feet 6 inches apart, and saving in this way in immediate outlay and the present value of future repairs, about £80 per mile. In the case of a bridge rail I found an opposite curve, and then the remedy would be to put sleepers closer together and smaller, a few inches makes the difference, as deflection varies with cube of interval; the stiff rails are much more nearly correct. I do not mean to say that the relation between the stiffness of the rail and the spacing of the sleepers can be, in this manner, ascertained to a

nicety, but that there is a relation between them which is worth considering, of course the nature of the ballast and other circumstances modify the result; when a driving wheel rests upon a sleeper 8 inches by 4 inches the depression varies from $\frac{1}{16}$ inch to $\frac{1}{8}$ inch, and is generally proportional to base of sleeper. The rails principally used in Ireland are bridge rails, Vignolles rail, or girder rail—the Barlow broad flange rail, on iron sleepers at joints, I believe now universally condemned. The double-headed rail in chairs is coming more into use. Considering the rail as a girder, no doubt the Vignolles rail and the double-headed are the strongest forms, the former is becoming a favourite in the North, and it has the advantage of simplicity, and requiring no intermediate chairs, the latter has the advantage in its capability of being turned, to gain which advantage it is necessary that the bottom be kept from resting on iron, and that it be deep enough to form a girder even when top is so much worn that it requires turning. The bridge rail is inferior to both as a girder, but has a much wider base, and from the sides being vertical and square to top and bottom can be, perhaps, more perfectly rolled than any other form. But their relative advantages mainly depend upon the way in which each kind can be jointed; this is the most important part of my subject, I believe the requirements of a good joint can be easily stated—a freedom to expand and contract longitudinally, and that every other motion be prevented efficiently and permanently. The double-headed and Vignolles rail has this advantage over all others, viz.: that they alone can be fish-jointed in the proper sense of the word, as applied to rails; the principle of fish-jointing is very simple, the plates are portions of wedges drawn against top and bottom by the bolts, when the weight comes over the joint, the rails deflecting nip the fish-plates, the weight not coming on the bolts, which are merely useful in holding together the plates; thus small girders are formed, held rigidly, except for the short interval, if

any, between ends of rails; the fish-plates also stiffen joints laterally, though not so much as could be wished. Vignolles rail stands on a narrow base, and is thus in danger of capsizing; when timber is in use for some time there is apprehension of this taking place. The Government Inspectors are now becoming very firm in requiring some fastening at the joints more secure than mere spikes. You may observe there is very little room in the flange for a bolt, at most a small bolt only (viz., $\frac{3}{4}$ inch), can be used, which is quite incapable of holding rail in its place, they are found to have started after a few months' use. I have been led to apply this chair, which I invented for repairing of bridge-rail roads, to this rail also. (Plate II., Figs. 1, 2, 3, 4.) All the inspectors seem to approve highly of it. Mr. Barton has just got them to lay on Clones and Cavan Branch.

The great advantage to be derived is the giving of a broad base near the joint, and the application of a large bolt entirely outside, or partly enclosed in the flange. I much prefer the former, as it is known that the notching of the rail not only weakens it by loss of the iron, but also injures the adjoining parts. I am indebted to Mr. Anderson for the result of some of his experiments on this subject, by which it appears that a bar $2\frac{1}{2} \times \frac{1}{2}$ is weakened, by being punched with a $\frac{3}{4}$-inch hole,—instead of its having had the same hole drilled—to an amount of 14 per cent., which shows that $\frac{1}{4}$ inch of the iron all round is damaged to about half its strength, no doubt this effect is much greater in the hard iron now rolled into rails. Wherever we apply the fastening for holding down the rail, that part of flange should be left whole, and the flange should be punched or notched only on intermediate sleepers to prevent travelling.

The great puzzle with bridge rails is how to make the joints; the old modes, one after another, have been found defective; some were bolted down through long chairs which caused sleeper to rock, some through a short chair, which cut

into the sleeper, in both cases the bolts were drawn and the flanges of rails frequently broken at bolt holes; in fact, most rails removed are found broken or cracked at this place. It has appeared to me that the source of failure lies in the fact that no bolt larger than $\frac{3}{4}$-inch can be used when bolts pass through flanges, but the fact that a $\frac{3}{4}$-inch bolt is insufficient to hold down rails does not make it conclusive that a bolt of twice and half that section would be also insufficient. On this principle, I designed the chair I now exhibit, by which means a much larger bolt can be applied, and without any danger of breaking off the flange, as the strength of the bolts prevent all jerk, and the washers diffuse the force over a larger portion of the flange; of course, if the flange had not been previously bored, it would be still stronger; but as this chair is meant mainly for repairs of existing lines, the absence of bolt holes is an advantage I do not calculate on. You may also perceive that the wide bearing on the sleepers gives increased steadiness, and causes the sleeper to last many years longer. With this chair is also used a compressed oak dowel (Fig. 1), which, though not an essential part, yet, is very useful in giving solidity to the joint; it is forced in by driving down rails upon dowel, with a mawl, and then drawing it right home by force of the bolts, the dowels are so tight that after 6 months use they expand $\frac{1}{8}$-inch on being withdrawn; the cost of this dowel is very small. I do not pretend that there is any great ingenuity in this arrangement, but I do say that it is practically a good joint, easily applied, and the only one I know of that can be applied to existing lines. I have tried the amount of motion allowed by this joint by fixing pieces of wax on the ends of adjoining rails, and, with a pencil imbedded in one and a card in the other, the motion of the joint was marked on the card after the passing of a train, the length of line marking the vertical motion, and the thickness of line the lateral motion. I found, after a number of trials, the relative vertical

motion to be less than one-fourth of that which took place in an ordinary bridge-rail joint, equally new; in the case of fish-joints, this motion was rather less, but the lateral motion round a curve greater; in the former case I found no lateral motion.

I know there are other chairs proposed and used for bridge-rails, the best of them is allowed to be Mr. Harty's,* which, though applicable to new lines, is difficult to apply to those existing, from the fact of their requiring a re-arrangement of sleepers, and new holes having to be drilled in rails. There are various forms of cast-iron chairs, some very ingenious; on this subject I have no experience, so will not speak, I am not, however, partial to cast-iron for bearing anything of a jerk, I therefore prefer my own, as I should, to all others for simplicity. This chair may also be used at half its length, with two bolts instead of four, and it is applicable to half-round native timber; this is almost, if not quite, as good as the long chair, but, where square timber is used, chair should cover the timber. The sleepers are found not to rock under the long chair; it appears that joint is so solid that the pressure comes upon sleeper as it does on an intermediate sleeper, and acts at once on centre; it is certain that one side of the sleeper cannot go down without bending washers and chair. The arrangement underneath, in lieu of the ordinary crab-nut, is worth noticing; it was designed for longitudinal sleepers, as the timber outside base of rail is so slight as not to be depended upon for securing a crab-nut to. This washer has slot holes to allow for any uneveness in the distance apart of the holes when bored; the washer will thus always fit to a pair of bolts, and can be placed across the grain of timber, and so will not cut into it. The surface which bears against

* I had not the pleasure of hearing Mr. Anderson's, I am sure, very good Paper on this chair, but those who have, must be quite familiar with the principles of Mr. Harty's chair, now almost universally adopted for new lines laid with bridge-rails.—(See *Proceedings I.C.E.I.*, Vol vi.)

the wood is double that of an ordinary pair of crabs, and the weight, including a pair of nuts, is $1\frac{3}{4}$ lbs less than that of a pair of large crab-nuts, and, therefore, in the double joint there is a saving of 7 lbs. The plate, moreover, can be used again and again, and is not condemned as scrap, which is the case with old crab-nuts. In longitudinal sleepers the fastening is also made independent of the outer portions of sleeper. In case of longitudinal, the half chair is quite sufficient. This arrangement of chair, as applicable for both kinds of rail, I have taken out a provisional protection for, and I am now taking the further steps for patenting.

I have not touched on many points of interest connected with permanent way, such as the value of different kinds of chairs, used for double-headed rails, nor as to the merits of different kinds of sleepers, cast-iron, or wood; I would only remark as to the latter, that I find nothing so cheap, so good as to strength, resilience, and durability, as the larch sleeper which has been grown on stony ground; and, perhaps, railway companies would be wise in planting some of their spare land, and the bottoms of deep embankments, where the trees could not shade the line, with this valuable and rapidly-growing timber. We have planted, on the Dublin and Belfast Junction Railway, nearly 40,000 this year, for a commencement. But I am now touching on other matters not immediately connected with the subject; I am, therefore, in danger of leaving my subject unfinished, which, I fear, I must do, as I only mean to bring forward what came under my own personal notice, hoping that others may produce their thoughts on this subject, which will, of course, take a different form according to their different experience; thus a subject becomes sifted, and knowledge is extracted tending to the perfection of matters connected with our profession; otherwise, in the great range of subjects embraced in the profession, we might not find time to investigate, personally, to any degree of perfection,

those various matters, a knowledge of which is required; for instance, there is a subject many want information about, viz.: the processes of manufacture of iron; the best way of forming the faggots from which rails are rolled, and the strength of the hard iron now used for rails; those connected more immediately with iron works could do much for us in supplying this information.

[March 12th, 1862.]

PROFESSOR DOWNING in the Chair.

On the RE-CONSTRUCTION *of* MALAHIDE VIADUCT.—By WILLIAM ANDERSON, Esq., Member.

A FEW hundred yards from Malahide station, the Dublin and Drogheda Railway crosses an estuary or bay, partly on an embankment and partly by means of a viaduct 577 feet long. At the original construction of the line, this viaduct was built of timber, in 11 spans, 52 feet each. The general arrangement of this structure is illustrated, Plate III., Fig. 3. The obstruction to the free flow of the tide, presented by the embankment, caused a very powerful current to rush through the bridge, and it was very soon found that the soil into which the piles were driven was rapidly washing away, and the bridge settling down in consequence. To arrest this evil large quantities of stones were, from time to time, shot into the stream till a bank was formed, averaging 130 feet broad, by 30 feet high, extending, in continuation of the embankment, right across the tide-way.—(Plate IV., Fig. 4.) By this means, and by constantly packing up the rails, in some places to nearly three feet, the viaduct was made to do its duty till the year 1859, when, serious signs of decay becoming apparent, the Directors ordered their Engineer, Mr. Marcus Harty, to prepare plans for the re-construction of the bridge. As this was a work presenting some engineering difficulties, and involving a large outlay, designs were also

obtained from some English Engineers of note, but none of them having been adopted, it is unnecessary to notice them any further. In arranging the design for a new viaduct, three things had to be mainly considered; 1st—the maintenance of the traffic during the execution of the works; 2nd—the widest possible tideway; and 3rd—the most durable material. The first and second considerations, together with the relative cost of the superstructure and piers, decided the number and length of spans, for these had to be so arranged that the piers might be constructed and the new girders laid without endangering the old foundations, while the order in which the new structure should be erected was determined with reference to the least obstruction of water-way. It would appear, at first sight, that the easiest plan would have been to take down one-half of the old bridge first, build the new piers on the site of the old ones, and complete the superstructure of one line; by this means much complication in arranging the traffic, and all danger of obstructing the water-way would be avoided. But it was feared that the old piers could not be disturbed with safety; that the hold of the piles in the ground was so uncertain, that any disturbance of the stones might loosen the piles to a dangerous extent, and, consequently, any works performed on one half the piers would seriously endanger the other. The new piers were, therefore, placed in the water-ways; the first three spans of the bridge were completed—first for the down, and then for the up road; all the old work taken down, and the new water-ways cleared and levelled; the increased facility for the flow of tide thus obtained would enable four more piers to be built, the down line over them completed, then the up line; the old work again removed, and, finally, the remaining piers and superstructure laid in. As regards materials, Mr. Harty proposed two plans: 1st—stone piers supporting cast iron girders, 26 feet span, with brick arches turned between

them, and the road laid in ballast; and 2nd—stone piers, supporting wrought-iron beams, 52 feet span, with the roadway laid on the top of them, on timber sheeting in the usual manner. The very much greater liability of wrought over cast iron to corrosion, from the effects of sea-water, was very strikingly exhibited in the old bridge, where the bolts and straps securing the wood-work were deeply eaten away, even where the surface showed a good coat of paint, while the cast iron sockets and shoes, though unpainted were almost free from rust. This fact induced Mr. Harty to recommend the first plan, but the strong prejudice which exists against the use of cast-iron in situations where failure might lead to most disasterous consequences, swayed the Directors to adopt the wrought-iron superstructure. The first thing done, was to prepare nine light travelling cranes. They were very ingeniously and cheaply extemporized, by converting pairs of old engine wheels into turn-tables, fixing them on the body of an ordinary ballast waggon, and arranging on them a wooden framework and jib, carrying an ordinary contractor's crab. At the same time stones for the piers were being delivered at the Dublin Terminus, and as the season was advancing towards spring, and no time was to be lost, six or seven quarries were laid under contribution; 1,703 tons of stone in all were worked up—calp for the rubble masonry, and limestone for copings. The dressing of the stones was all done at the Dublin Terminus; the piers being actually built up dry, the stones marked, transported to the bridge, and the piers again built up dry, but turned bottom up, alongside the line, on the embankment close to the viaduct. The working drawings of the iron-work were also got out; tenders were invited from a few firms in Ireland and England, and the contract ultimately given to Messrs. Courtney, Stephens, and Company, the firm with which the author is connected. There was no contractor for any other part of the work; it

was all executed under Mr. Harty's personal superintendence; a great portion, however, was done by piece-work as will presently appear. As soon as the various preparations were sufficiently advanced, the works on the bridge commenced in March, 1860, by carefully straightening and levelling the roads to the exact lines they were to occupy in the new structure. Switches were laid in at both ends of the bridge to turn the traffic at pleasure to either line, signals were erected near the point-levers for the guidance of the trains, the approach of which was notified, as soon as they came in sight, by the ringing of a bell fixed on the middle of the bridge. Over the site of each new pier a cross-road was laid, projecting sufficiently far over the water on each side to admit of a crane standing clear of passing trains. The rails of the main line were nicked out to allow the flanges of crane wheels to clear; and, as the sheeting over the new piers had to be removed, the main line rails, where they happened not to be over the wooden beams of the old bridge, were strengthened by bolting short pieces of rail under them. Seven workmen's huts were extemporized out of third class carriages; while the Engineer took good care of himself in a snug office, built on the north abutment, in the castellated style, tastefully decorated with coal tar. A siding was laid on the north embankment for the pilot engine, which remained in attendance throughout the work. Two boats and a boatman were provided, the latter stationed so as to be in readiness to render assistance in case of accident to the men, and life buoys were placed on the bridge for the same purpose. In spite of every precaution, however, the author grieves to record that one of his men fell into the tideway, was swept away by the resistless current and drowned; his body was not recovered for a fortnight. The rush of water under the bridge was at times awful, some idea of its force may be formed, when it is stated that a dam composed of about 4 tons of 80 lb. rails, bolted together to

form a boom, with stones and sods among them, was washed away on the night of May 4th. The ends of some of the rails may even now be seen, so tightly jamed among the stones and rocks, as to resist every available means of recovering them.

Before describing the method of constructing the piers, it is necessary to mention that the bank of stones, thrown in to support the old bridge, was assumed to be ample support for the new work, nothing more being required than to consolidate and level the base of the pier. A reference to Plate III., Fig. 3, and Plate IV., Fig. 4, and to the stereoscopic views on the table, will show that the pitching thrown in to support the old bridge had been piled round the base of the piers, forming thus two sides of a dam, the tide fell away very rapidly from the east side of bridge, which, therefore, required no dam, and it remained only to arrest the shallow but rapid stream which was caused by the discharge of the pent-up waters of the estuary. This was done at first by a dam of sods, kept down by rails and stones, but after the accident already described the following plan was adopted. On the west side of the tide-way to be dammed, a curved track was cleared at low water, the ends resting on the pitching round the old piers, and the convex side turned against the pressure of the bay, a wall of sods was then built up in the track, and securely pitched with stones on both faces, the form of the sides and top being such as to impede the flow of the water as little as possible, when once the tide rose too high for continuing the works. This dam was, after all, only a very imperfect protection, as the water found its way through the loose stones in every direction, so that all the foundations were laid under water. In preparing the site of the piers two plans were adopted. At first the loose stones were removed, to form a level bed at the proper depth, about some 15 inches below the general surface, and the edges of the hole thus formed were built

round with stones, set on edge without cement, the work being all under water; the space was then filled in with shivers mixed with iron-turnings to concrete them, the whole being rammed down, as long as any yielding could be perceived, by means of a 5 cwt. block of iron. To prevent the ram splashing into the water, a layer of stones was laid on the top of the real formation, and removed after the ramming was complete. Later on, however, this method was modified in favour of large flags, laid some 7 inches below the bottom of ashlar, and rammed down as before through stones temporarily filled in on them; the building of the edges with pitching was also discontinued until after the first courses had been set. As soon as a firm and level base was obtained a framework of old rails (Plate IV., Fig. 3), being the contour of the base of the pier, was laid down, and when adjusted at the proper level on a few blocks of stone, the intermediate spaces were carefully packed with flat stones all along under the rails, and the interior space filled in level with their upper faces, a grouting of cement being sometimes poured in if the state of the water permitted it.

On this foundation the first course of ashlar was laid, and the pier carried up very rapidly, the stones being taken down from their places in the pier on the bank, run on to the bridge in a hand lurry, and lowered very rapidly by two cranes, one working on the cross-road and one on the blocked up main line. Lewises were at first tried for slinging the stones, but subsequently abandoned for common chain hooks, which answered equally well. Medina cement (Nine Elms) was used for the work set in water, or when the work would very quickly be covered by the tide, and Roman or Portland for the rest. The piers are remarkable for having no plumbing quoins of any kind; they were built from centre lines stretched from a vertical post erected a few feet beyond the cut-waters of each pier. Templates were made for each course, as the

batter was in from every side, the correct position of each in the length of pier being given by a standard length from the guide poles. Stone pitching was carefully packed all round the new pier to guard it as much as possible from the violence of the current. After the old bridge had been removed the water-ways were carefully levelled, the gain in tideway being about 35 per cent.

The first stone of the first pier was laid April 14th, 1860, that of the eleventh on September 19th, 1860; about 12 days elapsing between the commencement of each pier. During this time, however, a great deal of the old bridge was removed, and some casualties occurred, as for instance, the dam of No. 2 pier failed on May 4th, as already described, and on the 8th of the same month the increased rush of water, occasioned by obstructing the first three water-ways, caused a breach in the 5th, which took 70 tons of stones to repair; and on September 17th, the dam of No. 11 pier gave way. There was also delay of about a month from the inability of the contractors to get the iron-work for the first three spans ready in time; so that on the whole it will be admitted that the work was done with very creditable rapidity, mainly due to Mr. Harty's admirable arrangement, great forethought, and unwearied personal exertions. It should also be remembered that all the works had to be arrested for the passage of every train, and that a great deal of the laborious work was done during the two hours or so of low water. The abutments were originally built of stone and very little alteration in them was necessary. The cost of the rock ashlar, dressed at the terminus, ready for building into the piers was $14\frac{1}{3}$d. per cube foot, the same stone delivered, dressed, from the quarry, $13\frac{1}{2}$d. per foot cube; and it was found that 10·7 cube feet of dressed stone was procured from a ton of rough; the real weight of the stone being $13\frac{1}{2}$ cube feet to the ton. The cost of transporting stone, building piers dry, twice over,

and finally setting the work in its place, could not be kept separately, as from the nature of the case it was performed in broken time.

The watermen did their work by the piece, the following being the cost of founding each pier:—

Removing dam from last pier; damming west end of old arch and maintaining same; filling and discharging stones and sods for dam, from quarry; sinking old waterway for foundations of new piers; setting flags to near the proper level, and guide post stones; covering flags with stone shivers and gravel mixed with iron turnings; ramming down flags with 5 cwt. ram; removing shivers and stones, and helping to set up guide posts; getting down rails, levelling and centring them accurately; flagging among them in shivers and iron-turnings to level of rails; attending to masons to the completion of first course of ashlar on rails; packing under outer edge of ashlar base; packing round pier and east apron; loading bottom to pitching and slope of apron; loading and discharging all stone required from quarry, £15.

Bending rails to form of cutwaters, and securing them to form of foundation; drilling and rivetting to plates at ends; and 4 fish rails and 2 cross rails near centre, each £3.

Cutting rails for a cross crane road over each new pier—crossing, square, the up and down main lines; cutting flange gaps in main lines, and 8 plates to go under them, including drilling, &c., £1 10s.

When the rails of main line were unsupported, and made beams of, per rail, 2s. 6d.

The two upper courses of the piers were of cut limestone, into which the cast-iron wall-plates, for the beams to rest on, were sunk.

As the new piers had to be built in the water ways, it follows that, if the regular spaces were preserved, the end spaces would have to be either $\frac{1}{2}$ or $1\frac{1}{2}$ times the old ones;

but, as so great a difference would have been inconvenient, the first and last piers were placed so as to divide a space and a-half into two; the new viaduct, consequently, consists of 8 spans, 52 feet, and 4 spans, 40 feet 2½ inches.

The depth of the larger beams is 3 feet 6½ inches between the intersection of the lattice bars, or nearly one-fourteenth of the clear span, the piers being 3 feet thick at top. The shorter beams are reduced in depth, in proportion to their length, so that in both the number of lattice bars is the same. Each span is composed of 6 beams connected together by horizontal and vertical cross-bracing; 4 beams being immediately under the rails of the two roads, and 2 beams under the handrails. Longitudinally, the beams are connected rigidly on every alternate pier, resting immovably upon it, while the remaining piers are provided with expansion rollers, (Plate III., Figs. 7, 8,) the upper flanges of the beams being merely held in position, laterally, by a joggle secured to one beam only. In order to avoid exposing a large surface to the action of the spray and sea air, the flanges of the beams are made as narrow and thick as possible, while the lattice bars in compression are made of thick bar iron instead of the more advantageous section of T, L, or channel iron. In addition to the amount of material necessary to meet the strains, ⅛-inch thickness all over is added to the roadway beams, to compensate for corrosion; the outer beams, under handrails, are in other respects, of the same strength, in order to secure protection to carriages getting off the rails.

The load on one of the larger road beams is thus estimated:—

Pitch Pine Planking 4 inch thick . . .	1 ton	10 cwt.
Gravel Strewed over same	2 „	0 „
Rails and Sleepers	1 „	10 „
Diagonal cross bracing	1 „	0 „
Beam	6 „	0 „
Passing Load ½ Ton per foot . . .	25 „	0 „
Total,	37 „	0 „

Thirty-seven tons, uniformly distributed, being rather more than $\frac{3}{4}$ ton to the foot run, and for this load the strength of the flanges is adjusted; while to meet the contingency of an engine running on a very narrow base, with unduly loaded driving wheels, the diagonal bracing is further strengthened to sustain a concentrated load of five tons travelling over the beam.

The shorter beams are similarly calculated to carry 28 tons each, with a concentrated load of 4 tons additional on the lattices.—(Plate III., Figs. 4, 5, 6.) The flanges of the beams are composed of pairs of unequal sided angle-irons, with their deep sides, between which the lattice bars are secured, vertical; the necessary sectional areas being made up by piles of plates, decreasing in number from the centre towards the ends. The webs consist of double systems of diagonal bracing, inclined at an angle of 45° to the horizon, and presenting 15 points of intersection with the flanges. Table No. 1, indicates the strain in tons, the sectional area in inches, and the unit strain in tons, on each bar of the bracing—calculated for the present paper with the aid of those most useful formulæ, for which the profession is indebted to our Honorary Secretary, Mr. B. B. Stoney, and which may be found fully worked out in the *Quarterly Journal of Science*, for October, 1859. If W represents the load on each apex of a system of bracing, inclined at an angle θ with the vertical, and n be the number of loaded apices between any given diagonal and the abutment, then the strain on that diagonal will be $=(1+n)\ n\frac{W\ sec.\ \theta}{2\ l.}$ when the first apex is distant one whole bay from the pier, and $n^2\frac{W\ sec.\ \theta}{2\ l}$ where the first apex is only one half bay distant from the pier. That portion of the formula $\frac{W\ sec.\theta}{2\ l}$ is a constant for every individual beam, so that the process of finding the pressure on each diagonal is simply multiplication

by $(1+n)\ n$ or n^2, as the case may be. Table No. II. gives the total strain, sectional areas, and unit strains in every portion of the flanges. In estimating the sectional areas available for duty, a deduction of $\frac{1}{8}$-inch of surface all over the beam has been made, to allow for corrosion, which, as has already been stated, is extremely rapid. In the top flange, and compression latices, no deduction has been made for rivet holes. In the bottom flange, in which all the holes are punched, the cross section of the holes augmented by one-fourth has been deducted, while from the tension lattice bars, in which the holes were drilled, their actual cross section has alone been taken. As regards the necessity of considering a punched hole as somewhat larger than its measured diameter, it is necessary to explain that, from several experiments recently made by the author, there can be no doubt that the material immediately surrounding a punched hole is sensibly injured by the violent straining it undergoes, and it is probable that from 0·2 to 0·25, added to the diameter of a punched hole, will be a safe correction.

The cross-bracing connecting the 6 girders of each space, gives rigid lateral support to the top flanges at 4 points, leaving, in the larger beams, a length of 22 feet in the centre to act as a column, with fixed ends. The breadth of the flange is 12 inches, or $\frac{1}{22}$ of the length, at which proportion Eaton Hodgkinson's experiments have shown that wrought iron will bear very nearly a crushing strain without lateral deviation.

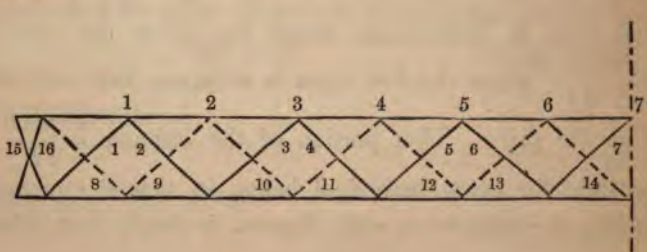

TABLE I.—Long Beams.

Strain in Diagonal Bracing due to 2·64 tons on each apex, and 5 Tons moving over beam.

No. of Bar	Maximum Compressive Strain			Available Sectional Area	Unit strain	Maximum Tensile Strain			Available Sectional Area	Unit strain
	Due to uniform load	Due to 5 tons passing.	Total			Due to uniform load	Due to 5 tons passing	Total		
	tons	tons	tons	sq. inches	tons	tons	tons	tons	sq. inches	tons
1	13·034	6·5	19·534	$5\frac{1}{4}\times1$ 5·25	3·72	0·000	0·0	0·000	—	—
2	0·266	0·5	0·766	$5\frac{1}{4}\times\frac{3}{4}$ 3·93	0·19	9·576	5·5	15·076	$4\frac{1}{8}\times\frac{3}{4}$ 3·1	4·8
3	9·576	5·5	15·076	$4\frac{1}{4}\times1$ 4·25	3·55	0·226	0·5	0·726	$3\frac{1}{4}\times1$ 3·2	0·23
4	1·064	1·5	2·564	$4\frac{1}{4}\times\frac{3}{4}$ 3·19	0·8	6·650	4·5	11·150	$3\frac{1}{4}\times\frac{3}{4}$ 2·4	4·65
5	6·650	4·5	11·150	$3\frac{3}{4}\times1$ 3·75	2·95	1·064	1·5	2·564	$2\frac{3}{4}\times1$ 2·7	0·95
6	2·394	2·5	4·894	$2\frac{1}{4}\times\frac{3}{4}$ 1·69	2·53	4·256	3·5	7·756	$1\frac{1}{8}\times\frac{3}{4}$ 1·1	7·0
7	4·256	3·5	7·756	$2\frac{1}{4}\times1$ 2·25	3·44	2·394	2·5	4·894	$1\frac{1}{2}\times1$ 1·5	3·26
8	0·000	0·0	0·000	$5\frac{3}{4}\times\frac{3}{4}$ 4·31	0·00	11·172	6·0	17·172	$4\frac{5}{8}\times\frac{3}{4}$ 3·46	4·09
9	11·172	6·0	17·172	$4\frac{3}{4}\times1$ 4·75	3·61	0·000	0·0	0·000	$3\frac{5}{8}\times1$ 3·6	0·00
10	0·532	1·0	1·532	$4\frac{3}{4}\times\frac{3}{4}$ 3·56	0·43	7·980	5·0	12·980	$3\frac{3}{4}\times\frac{3}{4}$ 2·8	4·64
11	7·980	5·0	12·980	4×1 4·0	3·24	0·532	1·0	1·532	3×1 3·	0·51
12	1·596	2·0	3·596	$3\frac{3}{4}\times\frac{3}{4}$ 2·81	1·28	5·320	4·0	9·320	$2\frac{3}{4}\times\frac{3}{4}$ 2·1	4·44
13	5·320	4·0	9·320	$3\frac{1}{4}\times1$ 3·25	2·86	1·596	2·0	3·596	$2\frac{1}{4}\times1$ 2·2	1·63
14	3·192	3·0	6·192	$1\frac{3}{4}\times\frac{3}{4}$ 1·31	4·65	3·192	3·0	6·192	$1\times\frac{3}{4}$ 0·75	8·25
15	0·65	5·08	5·73	$5\frac{3}{4}\times\frac{3}{4}$ 4·31	1·33	0·00	0·0	0·00	0·0	0·0
16	9·64	5·08	14·72	$5\frac{1}{4}\times1$ 5·25	2·80	0·000	0·00	0·00	0·00	0·00

TABLE II.

Strain in Flange due to a Uniform Load of 37 Tons.

No. of Space	Top Flange			Bottom Flange		
	Maximum Strain	Available Area	Unit Strain	Maximum Strain	Available Area	Unit Strain
	tons	sq. inch	tons	tons	sq. inch	tons
0—1	7·92	9·50	0·83	9·24	5·44	1·7
1—2	23·76	9·50	2·5	25·08	5·54	4·53
2—3	36·96	15·37	2·45	38·28	10·52	3·64
3—4	47·52	15·37	3·22	48·84	10·62	4·6
4—5	55·44	21·24	2·61	56·66	15·38	3·61
5—6	60·72	21·24	2·86	61·94	15·38	4·03
6—7	63·36	21·24	2·98	64·58	15·78	4·09

The lattice bars in compression are all $1\frac{1}{4}$ inch thick in the larger and 1 inch thick in the smaller beams, the breadth only being varied according to the strain. The sectional

area of these is determined by the law, that the power of flat bars to resist a compressive strain varies directly as the cube of the thickness, as the breadth, and, inversely, as the square of the length. This law, which has been thoroughly investigated, and experimentally demonstrated by Eaton Hodgkinson, will be found very clearly set forth in that mine of practical information, *E. Clark on the Britannia Bridge*, Vol. i., page 318. From an average of 18 experiments there recorded, on bars of various proportions, the author has calculated a constant for wrought iron, which gives very nearly the strength of any bar whose length exceeds 30 times its least dimension—let $l=$ length in feet, $t=$ thickness in inches, $b=$ breadth in inches, then the breaking load in tons,

$$W=196\frac{t^3\times b}{l^2}.$$

It is hardly necessary to remark that in consequence of the difficulty of getting bars perfectly straight, perfectly uniform in texture, and in making the direction of crushing strain to coincide accurately with the centre of the bar, very great accuracy is not to be expected in such calculations.

In considering the length of the compression bars, a question arises as to whether the tension lattices, which intersect them in the centre, can be considered as securely fixing those points, as regards lateral deviation. Inasmuch as the weight of a flat pillar depends on the square of its length; this is a most important consideration, for if the tension lattice was capable of keeping the centre of the compression bar immovable, the latter might be regarded as two short pillars instead of one long one, and might, consequently, be made of lighter section. That the tension bars do actually give great lateral support to weak compression bars may readily be seen in a great many existing bridges, even of large spans, where very long thin bars are loaded to a far greater extent than they could possibly sustain if not so supported.

It is quite evident, however, that the tension diagonal can give no lateral support until the bars have already deviated from their original plane, so that distortion must have commenced before this support is available. As regards any increased strain on the tension bars from the extra duty they may thus be required to perform, it is easy to show that it cannot be considerable.

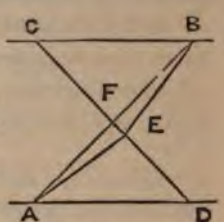

Firstly.—Suppose the compression bar A B to bend in the plane of the beam to the extent F E, C D being the tension bar crossing it, it is quite evident that if B F represents the strain passing down the bar, B E the resistance of the bent bar, F E will represent the force necessary to keep it in equilibrium, therefore, the additional strain on C D will be the load on B A, diminished in the proportion the amount of deflection bears to half the length of the bar, which in practice is always a very small fraction.

Secondly.—The effect of lateral deviation is to throw a tensive strain on C D, equal to the compressive strain on A B; because the angles at which the forces act, being the same, equilibrium can only obtain when they are also equal. But as the loads on the tensions and compression bars in any one part of a beam are very nearly equal, the strain due to lateral deflection can never greatly exceed what the tension bar is constructed to carry.

The rivets connecting the angle irons to the flange-plates are $\frac{3}{4}$-inch diameter; those connecting the lattice bars to the flanges vary from $\frac{3}{4}$-inch to $1\frac{1}{4}$-inch, according to the section of the bars, the latter are all in double shear, and so arranged that the sectional area of rivets holding each bar is at least equal to half the area of the bar. Some extracts from the specification will best explain the remaining details of construction.

"The position of the fish plates, at the joining of the flange plates and angle-irons, is not shown on the drawings, to enable the contractor to use the longest bars and plates possible; but it will be strictly required that the same available sectional area be preserved, in every part of a beam, as is shown on the drawings. No rivets may be used to fish the flange plates, except the two rows of $\frac{3}{4}$-inch rivets shown on plans. No rivets may be used to fish the angle-irons except those of the flange plates or $\frac{3}{4}$-inch rivets, in the same lines as the two rows fastening the diagonal bars.

"All holes in plates or bars, over $\frac{1}{2}$-inch thick, must be drilled; but, if $\frac{1}{2}$-inch thick, or under, they may be punched.

"All malleable iron, used in this contract, must bear a strain, by tension, of at least 20 tons per square inch of its sections, in any part of the plate or bar.

"All cast iron shall bear a strain, by tension, of at least 6 tons to the square inch of its section.

"The contractor shall provide for testing, in such way as shall be satisfactory to the company's engineer, 10 per cent. of the bars and plates to be used, the part to be tested being cut from the end or edges of the iron as shall be pointed out; and, if it shall happen that a sample tested, of any lot, gives way with a less strain than specified, it shall be in the power of the company's engineer, or any one acting for him, to reject the whole lot.

"All the beams shall be tested, if required, in the presence of the company's engineer, or some one acting for him, and to their satisfaction—the larger inside girders to 40 tons, the smaller to 30 tons, distributed."

It will be noticed that in this specification the quality of the iron is definitely fixed by a standard that can readily be measured, the ridiculous clause, hitherto in general use, defining iron by particular brands, is happily going very much out of fashion, though it is remarkable that it is not easy to get ironmasters to guarantee their iron to bear any given trial strain. The lattice bars were all rivetted to the flanges, by Cook's patent steam rivetting machine, a diagram of which the patentee has kindly sent to illustrate this paper. It differs from Garforth's machines in not being direct acting. The steam cylinder is placed vertically, the connecting-rod which works through a trunk, is connected to a lever, keyed on a

rocking shaft, forming also an eccentric which actuates the rivetting die. Nothing can exceed the quality of work done by this machine. The author finds that it is equal to 4 gangs of rivetters; each gang being composed of 3 men and a boy. In doing plain straight work, 1,500 rivets a day, of 10 hours, can be put in. The rivets are heated in a small air furnace, as at the Britannia bridge. It was found impossible to close the $1\frac{1}{4}$-inch rivets, in a satisfactory manner, by hand. A head was indeed formed, but the body of the rivet remained quite loose in the hole. In rivetting by pressure the iron is forced into all the inequalities of the holes; in proof of which it is found that nearly one-half more iron is required to make an ordinary $\frac{3}{4}$-inch rivet head by pressure than by hand. The specimen of rivetting on the table, two rows of which were done by this machine, and two rows by hand, at once show this difference.

The girders were all tested by laying on the specified weight of pig iron, before they left the contractors' yard. To facilitate this operation, two pieces of 12×4-inch plank, of a length equal to the span, were laid on the ground, the pig iron was piled on them, and the beam to be tested being laid on blocks, a few inches higher than the load, the weight was lifted on by means of $\frac{7}{8}$-inch screws, passing in pairs through cross-heads resting on the beam, into the planks below. These screws were so spaced that a cross-head rested over every intersection of the lattices with the flanges. As soon as a beam was tested, the rods were unscrewed, the cross-heads removed and the girder lifted out, without disturbing the load or screws, which were thus ready for the next beam. The deflections were taken by means of a fine line fastened at one end of the beam, and stretched by a weight, after passing over a delicately made pully at the other. The deflections were very regular and call for no special notice. The mean of the inner large beams was 0·55″ that of the inner small ones 0·39″.

The time occupied in testing did not exceed a quarter of an hour.

In testing isolated beams of this description, the author has observed that, in consequence of the strain in the tension, and compression lattices not passing exactly through the centre of the beam, but in planes at a short distance from, though parallel to each other, a considerable tendency to twist is apparent, rendering it necessary to support the ends of the beam, on opposite corners, on the tension side. This circumstance renders it very important, in isolated beams, to divide the compression bars and make the tension diagonals pass between them. In some small beams, recently made for the Royal Canal bridge, on the Dublin and Drogheda Railway, which were tested to 10 tons to the square inch, this twisting was so great that the load could not be laid on without fixing temporary hard wood pillars between the flanges over the abutments.

The specification originally provided that the iron-work was to receive two coats of oil paint; this, however, was given up in favour of a hot bath of coal tar, which was administered in the following manner:—Under the large travelling crane at the Dublin terminus, a cast iron tank—53 feet long, 2 feet 6 inches wide, and 5 feet deep—was erected and filled with coal tar; under one end was placed a small furnace, with the flue running under and all round the tank, to a chimney at the other end. As fast as the beams were delivered, the travelling crane deposited them, one at a time, in the tank, to simmer as long as the demand for them would admit; some, one hour; some, two days. When drawn out, they were allowed to drain for a short time previous to loading on the waggons. It is hardly necessary to state that this treatment ensured a most perfect coating of tar.

The beams having been lowered into their places by the travelling cranes on the bridge, were connected by

horizontal and vertical cross-bracing. The former is composed of 8 bars, of $5'' \times \frac{1}{2}''$ flat iron in each space, running at right angles to the beams, and rivetted under and over the bottom and top flanges. In the same plane with these, and secured in the same way, are the diagonal ties of $3'' \times \frac{1}{2}''$ iron.

The vertical bracing is formed of $5'' \times 2'' \times \frac{1}{2}''$ ⊥ iron diagonals, 4 sets to each span, rivetted to the inner sides of the flanges, directly under the $5'' \times \frac{1}{2}''$ flat bars, their ends being twisted and cranked, so as to admit their crossing each other and being rivetted back to back at their intersections.—(Plate III., Figs. 2, 4.)

The provisions for expansion in a bridge of this length, with slight piers, based on an uncertain foundation, was matter of anxious consideration, the more so, as the viaduct is on a gradient of 1 in 832; and it was feared that there might be a tendency in the whole bridge to work down to the lower end. To guard against this, Mr. Harty contrived a most ingenious and simple expansion apparatus.—(Plate III., Figs. 7, 8.) On every other pier, as already stated, the beams rested directly on metal wall-plates, but on the intermediate piers, their free ends were capable of motion on 2-inch metal rollers, arranged in wrought-iron roller frames. Furthermore, the ends of the bottom flanges were cut away on opposite sides, so as to pass each other, and were connected by pairs of short links, rocking on a centre pin secured in the wall-plate. By this arrangement the beams, though free to move, are yet secured to the piers, and the relative position of the two cannot alter. The author is not aware of a similar contrivance ever having been adopted before.

The maximum expansion of the Britannia bridge, 1,510 feet long, is $6\frac{3}{8}$ inches, so that the Malahide Viaduct may expand 2·4 inches, or 0·4 inches on each expansion pier; considering, however, that the beams are very near the sea, and protected from extreme heat and cold by the timber sheeting, the actual

amount of motion is not likely to exceed the half of that stated.

An inquiry of great practical interest, though, perhaps, not directly connected with the subject of this paper, is the relation between the theoretical and actual weight of beams, the relative quantity of material necessary to the flanges and webs respectively, and the amount of economy to be effected by reducing the flanges and webs in proportion to the strains.

With a view to illustrating this more clearly, Tables III. and IV. have been constructed.

TABLE III.

	Actual Weight		Actual Weight, deducting for Corrosion		Theoretical Weight of Beam, to break under 4 times working load	
	lbs.		lbs.		lbs.	
Top Flange, . .	3,805	32·82	3,003	32·17	1,745	41·40
Compression Lattices,	1,473	23·06	1,145	21·63	767	24·48
Tension Lattices, .	1,200		874		265	
Bottom Flange, .	3,805	32·82	3,003	32·17	1,438	34·11
Packings, Joint-plates, and Rivet-heads, .	1,309	11·29	1,309	14·02	—	—
	11,592	100·00	9,334	100·00	4,215	100·00

TABLE IV.

	Actual Beam, less allowance for Corrosion			Theoretical Beam		
	Uniform Section	Section proportioned to Strain	Per cent.	Uniform Section	Section proportioned to Strain	Per cent.
Top Flange, . .	3,858	3,003	77·8	2,619	1,745	66·63
Compression Lattice,	1,456	1,145	76·07	2,387	767	32·37
Tension Lattice, .	1,198	874		801	265	
Bottom Flange, .	3,858	3,003	77·8	2,135	1,438	67·35
	10,370	8,025	77·3	7,942	4,215	53·

In Table No. III. it appears that in the beam as it now

stands, the weight of the flanges, which are equal, is two-thirds the weight of the whole beam; the remaining one-third being taken up by the web, packings, rivet-heads, and joint-plates. The same proportion holds good when the $\frac{1}{8}$-inch of surface allowed for corrosion has been deducted; but the packings, &c., which at present are $11\frac{1}{3}$ per cent. of weight of the whole beam, becomes 14 per cent., as might be expected, since their weight is very slightly affected by the deduction. In the last two columns of the table are the weight of a beam supposed to be cut out of solid iron, with every portion accurately proportioned to the strain, which in the top flange is taken at 4 tons to the inch; in the bottom and tension lattices, at 5 tons; and in the compression bars to one-fourth the breaking load, by the formula $w = 215 \frac{n^3 b}{l^2}$.*

The flanges in this case absorb three quarters of the weight; the lattice-bars only one-fourth. The quantity of iron sacrificed to compensate for corrosion is a little over a ton per beam, representing about £768 in the entire bridge; whereas, the unavoidable waste of iron in overlaps, packings, joint-plates, rivet-heads, exclusive of the ton above noticed, is nearly 46 cwt., more than 46 per cent.

Table No. IV. gives a comparative view of the amount of saving effected by reducing the flanges towards the ends, and the webs towards the centre. Thus, in the beam, as it now stands, there is a saving of 22 per cent. in the flanges, and 24 per cent. in the web, being a saving of nearly 23 per cent. in the whole beam; whereas, in the theoretical beam there appears a saving of $33\frac{1}{3}$ per cent. in the top flange, nearly 33 per cent. in the bottom, and 68 per cent. in the web, and 47 per cent. in the whole beam. As regards the flanges, in this case, the saving is what may be inferred without

* The constant 215 is obtained from those bars crushed by E. Hodgkinson, whose scantlings were nearest to the sizes used.

actual calculation, because it is well known that the area of a parabola is two-thirds that of the circumscribed rectangle; now, the flange of a uniformly loaded beam ought to vary in section as the ordinates of a parabola, consequently, its weight should be two-thirds that of a flange of uniform section throughout. It may then be assumed, without much error, that the flanges form, generally, two-thirds the weight of a beam, the diagonals and packings, &c., one-third; that in practice it is possible, generally, to save one-fourth the material, by carefully proportioning the several parts.

In the large tubes of the Britannia bridge the weight of the top and bottom flanges is nearly equal, while the sides are a little more than one-third the whole weight, viz.—37 per cent.

From these considerations it is very easy to arrive at a quick method of estimating the weight of any given girder. The sectional area at the centre of one flange being obtained, the weight per foot is known, one-fourth of this, at least, may be saved by proper arrangement of the materials, and the weight of the whole beam will be three times this result.

The Board of Trade limit the strain on wrought iron to 4 tons to the square inch, in compression, and 5 tons in tension; this would make the bottom flanges of beams lighter than the top, were it not for the weakening effects of rivet holes; it is, therefore, generally correct to make the bottom flange the same gross area as the top. By dividing the strain in tons, in the centre of a flange, by 4, we obtain the sectional area; multiplying this by $3\frac{1}{3}$ lbs. the weight of an inch square bar, a foot long, we obtain the weight per foot of the flange; multiplying this into 3 we obtain the weight per foot of the beam, supposing its sections to be uniform; and, finally, multiplying by $\frac{3}{4}$ths we get the average weight of a beam, the flanges and lattices of which are proportioned in some degree to the varying strains. If we assume the depth of a

beam to be 1 foot in 12·8 feet, a very good proportion, this formula becomes—

$$\text{Weight per foot } \frac{W \times 12{\cdot}8 \times 3\frac{1}{3} \times 3 \times 3}{8 \times 1 \times 4 \times 4} = 3W.$$

Or, in other words, multiply the distributed load, in tons, a beam is required to carry, by 3, and the result is the weight in lbs. per foot of the beam. This rule will be found very useful in making rough estimates of bridges.

The following is the weight of bridge:—

	Per cent.	Tons	Cwt.	Qrs.
72 Beams	100	307	18	3
Cross-bracing	10·7	33	1	3
Rollers and Frames . . .	1·2	3	14	2
Wall-plates and Joggles . .	4·6	14	8	3
		359	3	3

The contract price for all the iron-work, including fixing beams in their places, and fitting in cross-bracing, but exclusive of carriage or placing the beams on the piers, was £6,000.

The wages paid for men employed in erecting and fitting, bracing and expansion gear, amounted to £144, a little over 8s. per ton. After the beams had been fixed in their places, they were prepared for the reception of the 4-inch sheeting, by levelling over the plates and rivets with longitudinal timber packings, made to fit closely on the top flange, recesses being cut for rivet-heads, joint-plates, &c. The planks were then laid across, in lengths generally equal to half the breadth of the bridge, with every seventh or eight plank running right across. Where the short pieces met in the middle of the 6-foot space their ends were secured by bars of $3\frac{1}{2}'' \times \frac{1}{2}''$ flat iron, placed over and under the joints, and connected by a few bolts.

The sheeting was secured to the beams by means of hook-headed bolts catching the flanges.

Memel Timber was first obtained by contract at 1s.

10½d. per cube foot, delivered at the terminus, in plank, 4 inches thick, not less than 11 inches wide; but the quality and rate of delivery not proving satisfactory, Dantzic timber was obtained from an eminent firm on the North Wall, at 2s. 6d. per cubic foot, the original contractor being at the extra expense incurred thereby.

The longitudinal sleepers were secured by wood screws to the 4-inch sheeting, and the rails laid in the usual manner A simple post-and-rail handrail, on either side of the bridge, and a thin layer of clean gravel, to protect the timber from fire, completed the bridge.

Mr. Harty's original estimate of the cost of reconstruction, was, £12,181 9s., from which he deducted £300, the estimated value of old bridge, leaving £11,881 9s. as the sum to be expended. The actual outlay was £11,741 13s. 3d., or £440 less than the estimate. The cost of this bridge is, therefore, a little over £20 10s. per foot. There are about 66 yards cube in each pier; making, probably, about 750 cubic yards, rock ashlar work and cut stone copings.

In order to ascertain the relative cost of the several parts of the bridge, and to separate those items, easily estimated, from the heavy contingent expenses, the following table has been arranged:—

Estimated cost of Masonry in Piers and Abutments, ...	£1800	...	20·13 per cent.
Piece-work in preparing Dams, Crane-roads, &c., ...	215	...	2·41 „
Iron-work in Superstructure, as per Contract, ...	6,000	...	67·09 „
Timber Sheeting and Handrail, @ 3s. per foot cube, ...	927	...	10·37 „
	£8,942		100·00
Miscellaneous Expenses, such as Cranes, Sidings, Switches, Tools, Watchmen, Boats, &c.	2,800	...	31⅓ „
	£11,742		

In comparing the cost of this viaduct with other bridges, it will be necessary to bear in mind the large allowance made for corrosion, and the circumstance, that the two outer ranges of girders are strong enough in themselves to carry a third line of rails.

In conclusion, it is necessary to explain that at the time this paper was begun, Mr. Harty was not a member of this Institution; that, beyond being contractor for the iron-work, the author had nothing whatever to say to the design or execution of the works, he has merely undertaken to record what struck him as being a valuable example of Railway Engineering.

[April 9, 1862.]

PROFESSOR DOWNING, Vice-President, in the Chair.

Description of a FIFTY-TON CRANE, *erected at* BELFAST. By G. H. STRYPE, Esq., Member.

THE Crane about to be described is of the kind known as a rolling crane, and is built from the designs of George Smith, Esq., Engineer to the Belfast Harbour Commissioners—a somewhat similar one at Liverpool having served him as a rough model. It consists of a timber carriage mounted on sixteen wheels, running on four lines of rails, four wheels on each rail.—(Plate VI.) At the outer end of the carriage is a pair of malleable iron jibs or shears, meeting together at the head, and supported by stays connected with the back end of the carriage. A pair of timber struts or spurs change the direction of the strain in the stays, and forms a portion of a system of bracing, giving steadiness to the whole. The hoisting gear is placed at the back end of the carriage, and a winch in the middle of the length of the carriage

serves for traversing the crane backwards and forwards on the rails.

The site selected for placing the Crane was on ground reclaimed from the lough, and the soil, being very soft, required peculiar care in making the foundations. This was a part that came but little under the author's observation, but on his writing to Mr. Smith, he has kindly furnished the particulars. The length of the work at right angles with the quay front, is 105 feet, and the breadth is 8 feet 6 inches for each pair of rails; the foundation for each railway being separate and distinct from the other, with a distance of 7 feet 4 inches between the stonework of the two. The ground, in the first instance, was excavated to a depth of about 6 feet for each line of foundation, and larch piles, 35 feet long, driven in each excavation in three parallel lines.—(Plate V.) The heads of the piles were cut off level, at a depth of 5 feet 8 inches below the surface of the quay, and on the top of each three piles was placed transversely a balk of larch, 9 inches by 9 inches. On these balks were laid longitudinal planks of red pine, 4 inches thick, on which was built a thickness of 3 feet 3 inches of rubble masonry. Resting on this rubble work, and under each rail, is a line of cut stone, 1 foot 4 inches thick and 3 feet wide, on which the rails are fastened with oak treenails, the spaces between the stonework being filled in with the ordinary paving of the quay. The gauge of each railway is 5 feet, and the distance between the centres of the two lines 15 feet 10 inches.

The carriage of the crane is of pitch pine, 60 feet long and 19 feet 6 inches wide. There are four longitudinal pieces extending the whole length of the carriage, and a fifth, a central one, which does not extend the entire length, being divided near the centre to give space for the traversing winch. These timbers are 14 inches square. The transverse

timbers are 11 in number, all of them, with the exception of the end ones, being 14 inches by 9 inches, placed under the longitudinal timbers, to which they are secured by two bolts, 1 inch diameter, at each joint; these timbers are half lapped into each other, at every crossing, a depth of 1 inch. The end timbers are 14 inches square, and are fastened to the longitudinals by tenons and mortises. A pair of diagonal bolts, 2 inches in diameter, with strong cast-iron washer plates, secures the whole framework from cross twisting.

The railway wheels are sixteen in number, 4 feet in diameter, 7½ inches wide at the rim, and are cast with solid discs, 2 inches thick (Plate VII., Fig. 3), they run loose upon their axles, the naves being 10½ inches deep. The four front axles, those under the shears, having the greatest load to sustain, are 7 inches diameter in the body, and 5½ inches diameter in the naves of the wheels; the remaining four axles are 5½ inches in the body and 4½ inches in the wheels. All these axles are keyed fast in cast-iron brackets, bolted to the longitudinal timbers of the carriage.

The two transverse timbers of the carriage, at the front end, and the portions of the longitudinals between them, are strengthened with additional pieces on the top, 10 inches deep, and on these are bolted a pair of strong castings, which carry the two shears or jibs and the two spurs. The length of the shears is 56 feet 9 inches from centre to centre; the height of the centre of the head from the ground, 50 feet 9 inches, and the overhang clear of the carriage, 30 feet 9 inches. They are made of boiler plate, ½-inch thick, in ten lengths of plate, the external diameter at the ends being 20 inches, and in the centre, 30 inches. In constructing these, the plates, after being bent to form, had the longitudinal edges planed, and were rivetted together with strips in the inside, 8 inches wide. The ends of each section were then turned in the lathe, and rivetted together, with

internal rings, 8 inches wide, covering the joints. The joints throughout are double rivetted, and the rivets countersunk on the outside, making a perfectly fair external surface. The ends of the shears enter into cast-iron sockets, 2 inches thick and 2 feet 1 inch deep, with a clear space of $\frac{5}{16}$ inch around, which was filled up with rust cement, when the sockets were properly adjusted. The lower sockets have rule joints cast on them, which enter between corresponding joints cast on the plates carrying the shears, the joint pins being 4 inches diameter; these pins, however, do not support the thrust of the shears, which is carried by the cylindrical portions of the rule joints, all the surfaces of which, where they come into contact, being accurately fitted together. As the shears at the bottom are separated from each other a distance of 15 feet 10 inches, a strong tendency to spread at the foot is produced; this is not allowed to be communicated to the carriage, but is sustained by a tie-rod, $2\frac{1}{2}$ inches diameter, connecting the pins of the joints together, the union being effected by sockets and cotters. The sheave heads (Plate VII., Fig. 2) are cast with the upper sockets, and have strong side flanges, which were faced in the planing machine, and when bolted together form the connexion between the shears at the top.

The spurs are made of greenheart; their length between the centres is 36 feet 3 inches, their diameter at the middle 15 inches, and at the ends 12 inches. They are fitted with cast-iron sockets, similarly to the shears, and the lower sockets have also rule joints connected to same plates as those of the shears. The upper sockets are not connected immediately together (Plate VII., Fig. 1) like the shears, but are placed at a distance apart of 9 feet 3 inches between their centres, and are joined by a tie-rod, $2\frac{1}{2}$ inches diameter, with sockets and cotters, as described for the lower end of the shears.

A pair of tension-rods, 2½ inches diameter, connect the heads of the shears and spurs together, and two other pairs of tie-rods connect the spurs with the hinder end of the carriage. These sustain the shears in position. Two other smaller pairs of tension-rods radiate from the heads of the spurs to different points in the shears, and from these points rise bars of T iron, with their upper ends connected to articulated joints in the main tension-rods. The pairs of T iron struts are stiffened laterally with diagonal bracing, and diagonal tension-rods placed between the spurs, also prevents lateral movement in them. It may be observed here that when the crane was first commenced upon, it was purposed to make the shears of timber, and the two pairs of tension-rods just described were essential in preventing the shears sinking in the middle by their own weight; but by substituting iron for timber in their construction, they were found to be so rigid, that it is probable these tension-rods might have been omitted without detriment to the stability of the structure. This would have materially simplified the work, as it was found that getting the pins through so many eyes at the top of the spurs was a difficult operation.

There are two sets of hoisting gear, the exact counterpart of each other. These are carried by three cheeks, bolted down to a cast-iron platform or sole at the back end of the carriage, the middle cheek being common to both sets of gear. The platform is 24 feet long, 12 feet 8 inches wide, and 1½ inch thick, and is cast in four pieces, with strengthening ribs on the under side. It has also three sets of transverse trusses underneath, of malleable iron, which counteract the tendency to sink in the centre.

The hoisting barrels are 3 feet 6 inches in diameter and 4 feet 10 inches, long and are cast with a spiral groove in each to receive the vertical links of the chain. The barrels are bushed with brass at the ends, and run loose on the shaft,

which passes through both barrels, and serves also as a stay to connect the upper part of the three cheeks together. The main spur wheels are keyed on to the outer ends of the barrels.

The particulars of the hoisting gear are as follows:—

	Diameter		Teeth	Pitch	Face	Shaft Journals
	Ft.	In.	No.	Inches	Inches	Inches
1st Wheel, . .	8	$4\frac{1}{4}$	105	3	7	6
1st Pinion, . .	1	$4\frac{1}{4}$	17	3	$7\frac{1}{4}$	3
2nd Wheel, . .	5	1	90	$2\frac{1}{8}$	5	3
2nd Pinion, . .	0	$8\frac{1}{4}$	12	$2\frac{1}{8}$	$5\frac{1}{4}$	$2\frac{1}{4}$
3rd Wheel, . .	4	$0\frac{3}{4}$	87	$1\frac{3}{4}$	4	$2\frac{1}{4}$
3rd Pinion, . .	0	$7\frac{1}{4}$	13	$1\frac{3}{4}$	$4\frac{1}{4}$	2

There are two of the pinions last in the table both working into the third wheel, and they are provided with separate shafts and handles, the object being to enable a greater number of men to be employed in working the crane. The radius of the handles being 16 inches, the ratio of velocity between them and the barrels is 230 to 1, and as the blocks increase the power fourfold, the ratio between the initial and final velocities is 920 to 1. In cases where a quicker velocity is desirable, such as in taking up the slack of the chains, the handle can be put on the shaft of the second pinion, in which case the ratio of velocity is 138 to 1. There is a ratchet wheel and pawl on each of the shafts of the second wheel, by means of which, either set of the hoisting gear can be used singly, or the whole fixed when required, but no brake is employed. The chains between the barrels and the head of the shears is supported on three pairs of friction pullies, one pair of them carried by the spurs, and the others by the T iron struts.

These pullies are free to move on end on their respective shafts, in obedience to the lateral movement of the chain as it becomes coiled on the barrels. In tracing the course of the chain it will be seen that, proceeding from one of the

barrels, it passes over the friction pullies and one of the sheaves of the jib, then under the travelling block, over the gin block, and again under the travelling block, from thence it passes over the second sheave of the jib, and finally over the second set of friction pullies to the second hoisting barrel. Thus it is obvious that 8 men employed at one of the sets of hoisting gear, can raise as great a weight as sixteen men working both sets, but require twice the time to raise the weight through any given height. On each side of the sole of the hoisting gear, and resting on the frame of the carriage, is a flooring of cast plates on which the men stand in working the crane. The sheaves of the jibs are 3 feet diameter, and those of the blocks 2 feet 2 inches diameter, they are all finished in the lathe, and are formed with a groove in each, in which the vertical links of the chain lie. This produces less strain in the chain passing round the pullies, than if they were formed with the groove wide enough to receive the chain bodily, at the same time the chain is effectively prevented from twisting. The hoisting chain is $1\frac{1}{4}$ inches diameter, short linked, and is 400 feet long; it was proved to 22 tons, being equivalent to a load of 88 tons lifted.

The traversing gear is carried by two cheeks bolted to two balks of timber secured to the transverse timbers of the carriage near the centre of its length, the middle longitudinal timber being cut away at this place to make room for the gear. The barrel is 16 inches in diameter and 4 feet 6 inches long, and its axle is carried by a pair of cast-iron brackets bolted to the underside of the two balks just named, the same bolts holding down the cheeks of the winch and securing these also. The chain is $\frac{5}{8}$ inch diameter, and after making three or four coils round the barrel, the ends are fastened to two cast-iron beams, bolted to the end stones of the foundation.

The wheels of the traversing winch are as follows:—

	Diameter		Teeth	Pitch	Face	Shaft Journals
	Ft.	In.	No.	Inches	Inches	Inches
1st Wheel, . .	4	3	86	$1\frac{7}{8}$	5	$3\frac{1}{2}$
1st Pinion, . .	0	$6\frac{5}{8}$	11	$1\frac{7}{8}$	$5\frac{1}{4}$	$2\frac{1}{2}$
2nd Wheel, . .	4	$3\frac{1}{2}$	108	$1\frac{1}{2}$	$3\frac{1}{2}$	$2\frac{1}{2}$
2nd Pinion, . .	0	$5\frac{3}{8}$	11	$1\frac{1}{2}$	$3\frac{3}{4}$	2

The final ratio of velocities is therefore 136 to 1, and it was found that two men could readily traverse the crane to and fro with the load of 50 tons.

In calculating the strains to which the various parts of the crane are subjected in carrying the maximum load, we must first consider the weight of the shears themselves, together with the parts immediately resting on them. This, when reduced to its equivalent effect suspended by the chain, is equal to 12 tons. Adding this amount to the 50 tons to be lifted, we have 62 tons as the greatest load to be sustained vertically, which resolves itself into a force of 107 tons acting in the direction of the axles of the shears. The smallest diameter of the shears is 20 inches externally, and 19 inches internally, the sectional area consequently is $30\frac{1}{2}$ square inches, and $53\frac{1}{2}$ divided by $30\frac{1}{2}$, equal to $1\frac{3}{4}$ tons per inch, is the maximum compressive strain in them.

The experiments of Mr. Hodgkinson show the ultimate crushing strength of malleable iron columns, such as these, to be about 12 tons per inch of section, hence these shears, with the maximum load suspended, are strained to about 1-7th of their ultimate strength.

The disposition of the blocks causes half the lifting weight to be sustained by the tension rods and the other half by the chains; but in addition to this the tension rods have the dead weight of the shears to support, the total being $25+12=37$ tons acting vertically. The resultant of this in the direction of the tension rods is equivalent to 38 tons, or 19 tons on each

rod. These rods are $2\frac{1}{2}$ inches diameter, or 5 inches sectional area, and $\frac{5}{16}$ equal to 3·8 tons per square inch, or about $\frac{1}{6}$ of the breaking strain.

In the act of lowering by the crane, that portion of the chain extending from the barrels to the shear head is relieved from a portion of the load equal to the friction of the various pullies, and consequently the strain on the tension rods is increased by an equal amount. However, the surplus of strength possessed by the rods is amply sufficient to cover this, as well as any accidental jerk of a moderate character that may occur in using the crane.

Although the section of iron in these rods was thus evidently sufficient for the purpose, still as there were many welds in them, it was highly important that the soundness of the whole should be ensured before leaving the works. In the absence of any regularly constructed apparatus for this object, the following method of proving the bars was adopted:—The tubular portions of the shears having been completed, one of them served as the basis of operations. A strong cast-iron disc was placed against the end of the tube, and a powerful screw, which happened to be on the premises, was passed through a hole in the centre of the disc, the nut of the screw resting in contact with the outside face of the disc. The portions of the tension rod about to be tested were placed inside the tube, one end being secured to the extremity of the tube farthest from the disc, and the other end of the rod connected to the screw by a piece of iron of a quality known to be capable of withstanding a tensional strain of 24 tons to the inch. When all the connections were made, the nut was turned round with a long lever until the given piece of test iron was torn asunder, and as its area at the point intended to be broken was $1\frac{1}{2}$ inches, the rods were each subjected to a strain of about 36 tons, thus proving them to nearly twice the amount they have to bear with the maximum load.

In testing the crane when finished, a pile of rails, weighing, with the chains that bound them together, 52 tons, was raised 15 feet high from the ground, and after traversing the crane several times backwards and forwards, the load was left suspended for six hours; the result was satisfactory in every respect.

The total weight of this crane is about 108 tons, of which, 72 tons are cast iron, 22 tons, malleable iron, $2\frac{3}{4}$ cwt. brass, and 14 tons, timber. Messrs. John Rowan and Sons were the contractors, by whom this crane was constructed, and the cost, including some trifling extras, was about £1,650. The cost of the foundation was about £800.

Subjoined are the weights of the principal parts:—

16	Running wheels,	each	$14\frac{1}{2}$	cwt.
4	Front axles,	"	8	"
4	Small "	"	5	"
2	Front wheel-brackets,	"	60	"
8	Back " "	"	8	"
6	Washer plates,	"	$1\frac{1}{4}$	"
2	Foundation plates for jibs,	"	63	"
2	Sockets for bottom of jibs,	"	17	"
2	" top "	"	32	"
2	Malleable iron jibs,	"	88	"
2	Sockets for bottom of spurs,	"	7	"
2	" top "	"	7	"
	Bed plate for hoisting gear, 4 pieces,	"	45	"
3	Side cheeks,	"	8	"
2	Barrels,	"	63	"
2	Large spur wheels,	"	20	"
2	Second " "	"	7	"
2	Third " "	"	4	"
8	Pinions,	"	11	"
	Barrel axle,	"	10	"
8	Shafts for wheels,	"	11	"
	Lower block, entire,	"	$17\frac{1}{4}$	"
	Hoisting chain,	"	57	"
	Traversing chain,	"	5	"
	Traversing winch, entire,	"	55	"

[May 14, 1862.]

M. B. MULLINS, Esq., Vice-President, in the Chair.

On Improvements *in the* Manufacture *of* Peat Fuel.—By C. Hodgson, Esq.

There are few subjects which have attracted more general attention in this country, or which have been pursued with so little success heretofore, as that of the utilization of peat on any large scale. The land is burdened with nearly three million acres of bog, which, by resisting the efforts of the cultivator and impeding local intercourse, go far to neutralize any recoupment derived from them in the shape of an inferior fuel, obtained in most seasons with difficulty. It is, therefore, but natural that many efforts should have been made to turn these barren wastes to some useful purpose, and consequently we find, from time to time, the philanthropist, the speculator, and the man of business, emulating each other in this pursuit. But one common enemy has hitherto baffled the efforts of all classes, rendering abortive the most ingenious contrivances for the solidification of peat into a compact fuel, and frustrating the most elaborate chemical processes for the development of its more valuable constituents. This grand obstacle to progress is water, which is capable of being absorbed by peat in an almost incredible proportion, and of being retained with an obstinacy not easily overcome. It is this property in peat which has hitherto baffled so many efforts to convert it into a more available fuel. In the first place, it is exceedingly difficult to deprive blocks of peat, however small, of the contained water; and secondly, as the water does evaporate to a certain extent, air replaces it, keeping the pores much distended, so that a bulky and unportable substance results, which always contains from 20 to 30 per cent. of water. Few of those who have given their attention to this subject have appreciated the magnitude of this practical difficulty; very

many have even omitted to test thoroughly the average quantity of moisture in our peat bogs, and will not believe the reports of those who know from actual experience how much water the Irish peasant raises and spreads out upon the ground in order to obtain a ton of fuel. Even very lately a pamphlet appeared, on the strength of which it was intended to found a commercial undertaking, and which assumed as its starting point a proportion of contained water, not more than one-fifth of that which actually exists.

The following table gives the average of several hundred tests by careful evaporation, showing the quantity of water contained in peat in different conditions of the bog, and in various stages of desiccation, under the ordinary method of cutting and air-drying. No attempt is made to distinguish between the light and dark-brown and black varieties of peat, as the quantity of water contained depends far more upon the its position and drainage in the bog, and upon the amount of drying which, when cut, it has received, than upon the ordinary difference of quality :—

	W.	P.	W.	P.
The general mass of undrained peat bogs, not including the edges or the heathy surface, .	from 92+	8 to	95+	5
Bog edges and parts of bog, more or less drained, in the state in which peat is generally cut, .	from 88+	12 to	91+	9
Thin upper surface of a well-drained bog for about one inch deep, all vegetation being cleared off,	from 75+	25 to	82+	18
Turf in the state in which it is usually "footed," or raised into small piles, . . .	from 75+	25 to	80+	20
Turf when ready to "clamp," or build in larger piles, ...	from 50+	50 to	60+	40
Turf ready to stack, ...	from 25+	75 to	35+	65
Turf as generally used, ...	from 20+	80 to	35+	65
Carefully stacked turf kept from six to twelve months in stack, ...	from 18+	82 to	20+	80
Turf well saved and kept in a dry house for about two years, ...	from 12+	88 to	15+	85

It will thus be seen that no small obstacle lies in the way of those who would prepare peat for burning, by whatever method it be attempted; but those who have calculated on obtaining, by the common system, any considerable supply for commercial purposes, from a single district of bog, have been met by the peculiar practical difficulty which besets this manufacture; for, when large quantities of common turf are required, contrary to the usual rule in other productions, which diminish in cost proportionably with an increased make, the price of peat per ton is found inevitably to increase directly its manufacture is stimulated beyond a certain very moderate limit. The cause of this is obvious; the turf-cutter can only work round the edge of a bog, or upon occasional main drains; so long as he wishes only to produce a small quantity from a given length of bank, he can himself spread the sods as he cuts them; if, however, more is required, he must be attended by a wheeler, which at once doubles the cost, and where there is a belt of land of more than forty yards wide to be covered, two or more wheelers are necessary. The cost of again collecting the dried turf, and concentrating it at any given place, of course increases, *pari passu*, with the increased cost of spreading. To give some idea of how much produce can be practically counted upon within a given district, it may be stated generally, that from 1,000 to 1,500 tons obtained from a line of turf-banks an English mile long, is a large yield for one whole year's operation, and that this can only be completely prepared, brought down from the bog, and delivered at road or water-side at a cost of about 5s. per ton. If, however, a number of small farmers were to cut from the same mile of banks about half the above quantity, it would probably cost them about 3s. per ton similarly delivered. Whereas, on the other hand, if it were desirable or even possible to obtain say 2,500 tons from the same locality, it could only be effected at a cost of 7s. to 8s. per ton, and much of the peat

would only receive indifferent drying, from being necessarily carried back on to the interior of the bog. The truth of these observations was clearly and unfortunately demonstrated in the case of the late Irish Peat Company, who required at their works near Athy, a constant supply of fifty tons per day, or as much of that quantity as could possibly be obtained for the manufacture of oil, tar, paraffin, &c. Relying upon the statements of several writers, probably corroborated by their first experience of producing small quantities for experiments, they assumed that the common turf of the country (their raw material) would cost them 2s. 6d. to 3s. per ton, but they soon found that cost increase to 5s., and long ere they had secured even the minimum supply required to carry on the works with a prospect of commercial success, they found their average cost of peat to be from 6s. 6d. to 7s. per ton, and this increase of outlay, coupled with the downright impossibility of obtaining a much larger supply, were amongst the proximate causes of failure in that truly enterprising effort. Turning from this part of the subject, and admitting that peat manufactured in the ordinary way is a cheap and useful domestic fuel for those who can cut it for themselves and use it on the spot, we come to the main object of this paper, viz., a discussion on the improvements attempted or introduced in the above manufacture. And here it will be advisable to recapitulate the obvious defects in common peat which require to be corrected, the properties which it is desirable to develope in it, and to state generally its constituents as a fuel when compared with coal and other combustibles, thus setting before us what has to be done in the matter, what kind of article we may hope to produce, and what will be its value. Common turf, independent of any difference in chemical constitution, has in itself, and in its mode of preparation, five main defects, which render it practically inferior to coal.

1. The consumer never obtains it in a sufficiently dry state to give its full effect in combustion.

2. As from one-third to one-fourth parts by weight of the peat of commerce is simply water, the consumer is always obliged to pay carriage on one ton of water for every two or three tons of actual fuel he receives, this constitutes a disadvantage quite distinct from that last named.

3. It is so bulky and porous an article, that it is impossible to convey it as cheaply as coal, and for the same reason it requires much larger arrangements of fire-grate, &c., to produce a given effect than is required for the same with coal, and from its lightness, though capable of producing a very intense heat, it will not bear the stimulation of a powerful blast.

4. The manufacture of common turf depends at all times upon favourable weather; its supply is, therefore, always precarious.

5. From the circumstances already explained, it is impossible to obtain a large quantity of fuel—as much for instance, as would be extracted from a coal mine of very moderate capacity—from any one estate, or even considerable tract of bog.

The qualities, therefore, to be produced in an improved fuel from peat, so as to raise it as nearly as its chemical constitution will admit to the standard of coal, are as follows:—

1. Perfect or nearly perfect dryness, so that all the substance paid for by the consumer may be actual fuel, and not partly water, retarding combustion and increasing the cost of carriage.

2. Density, if possible, equal to that of coal, so that it may rank equally with coal in capability of transport (a most important quality), and also be a sufficiently compact fuel to be used with advantage in the same fire-grates generally in use for coal.

3. Hardness or tenacity, which, to a great extent accompany density, enabling the fuel to be moved without much loss from abrasion, to be consumed in strong-blast furnaces, and to support, or possibly to support, the burden of metallic ores under reduction.

4. Any improvement in the mode of manufacture must include the completion at least of the drying process by artificial means, or else perfect dryness can never be attained, nor can any amount of dryness be depended upon with certainty in this climate.

5. Whatever method is adopted for natural drying previous to finishing by artificial means (it being impossible practically to dry from the primitive state artifically), it must be such as shall produce a partially dry substance in large quantities, without incurring an increase of cost in proportion to the increased demand for it.

We now come to consider the chemical constitution of peat, and its consequent theoretical value as compared with coal. Finding many discrepances in the various analyses extant, both of coal and peat, which probably arise as well from difference of manipulation as from the considerable variation in quality of each fuel, it is fair to take a mean analysis in in both cases. The following may be relied upon as representing the general constituents of each substance :—

PEAT.		COAL.	
Carbon . .	57 per cent.	Carbon . .	85 per cent.
Hydrogen . .	6·5 „	Hydrogen . .	4 „
Oxygen . .	32 „	Oxygen . .	3 „
Ash . . .	4·5 „	Nitrogen . .	3 „
		Ash . . .	5 „
	100		100

Comparing these analyses, it will be seen that almost the

only essential difference between the two fuels, regarded as calorific agents, is, that peat is deficient of carbon by about one-fourth of the quantity contained in coal, its place being taken by oxygen; and as fuel in combustion can receive all the oxygen it requires from the atmosphere, it is manifest that any contained in the fuel cannot be taken as a portion of its value; of hydrogen, which is four times the value of carbon as a calorific agent, peat generally contains a little more than coal, but this excess cannot safely be counted upon, as a considerable portion must be supposed to combine with oxygen and forming water, to be partially lost as an effective agent.

We must, therefore, look to the proportions of carbon in each as the best test of the relative value of the two fuels, and from this we arrive at the conclusion that the duty of perfectly dry peat ought to be two-thirds of average coal.

And here it may be stated that this theoretical value is now found to be fully borne out in practice, for with compressed peat perfectly dry, two-thirds the duty of coal has been repeatedly performed during the last twelve months. In two qualities of no small importance peat does excel coal; it contains very little or no sulphur, which is of great advantage to any metal exposed directly to the action of its flame, and in scarcely any variety does the ash vitrify—a defect in most coal which is productive of much trouble to the firemen, and considerable waste of grate bars. Relying on the excellence to which it thus seemed possible to bring peat fuel, when those disadvantages were overcome on the one hand, and these perfections attained on the other, many men have started with high hopes and eager anxiety to carry to a successful issue so desirable an enterprise; and so far as the actual physical possibility of the matter, many have succeeded. But unfortunately in these degenerate days physical possibility is of no use whatever, unless it be accompanied by the far

more important qualification of financial possibility. It is an easy and pleasing pursuit to try what good things can be made out of comparatively worthless materials, but it only becomes a useful pursuit to the operator, and to mankind in general, when the "good things" are intrinsically more valuable to humanity than the labour and material which have produced them

Many have made beautiful and compact specimens of peat fuel, have produced charcoal from it, have made moulded ornamental articles with it, and converted the spongy mass into a fine lubricating oil, clear white paraffin, and gas of high illuminating power; but how many have fulfilled the one common-place little condition of "making it pay?" As has been before stated, the one obstacle to the fulfilment of this little condition is—water; and this paper would never have been written were it not that there has lately been developed, and put into operation, a method of preparatory desiccation which, leaving five-sixths of the water behind in the bog, actually *in situ*, enables the operator to obtain, with much rapidity, a substance or raw material for future operations, consisting of very nearly equal parts of peat and water, instead of laboriously cutting and moving nine or ten tons of dead weight to obtain the material for one ton of real fuel. The discovery of this new process, coupled with progressive improvement in compressing machinery, have brought the hitherto experimental work at Derrylea, near Monasterevan, to a point of efficiency which leaves no further doubt as to the possibility of producing a dry peat fuel with reasonable profit, and on such a scale as, when generally adopted, cannot fail to prove of benefit to the country at large. Before proceeding to describe, in detail, the process now in operation, we will trace some of the different methods which have heretofore been tried for the drying and consolidation of peat. To attempt a history of them all, would be unnecessary and

wearisome, and present a retrospect not by any means encouraging.

In many parts of Ireland, where even turf fuel is scarce, the peasantry make for themselves an article called "hand turf," which is formed by working the wet substance into a pulpy mass with the feet and hands, and afterwards cutting it into squares, as it lies like paste on the ground; these, when they attain a certain consistency, are repeatedly turned over and piled in heaps, and, when tolerably hard, are stacked for winter. This mode produces a fuel rather more dense and compact than common turf, but it is exceedingly costly, and no large quantity could be made. In Holland and Holstein, where fuel is very dear, and the peat bogs are often found totally submerged, a process somewhat similar is carried on; the peat is scraped up with perforated scoops, which allow the water partially to drain off; having been spread on a flat piece of ground it is then trodden out by oxen or men, and afterwards moulded, as we should common bricks. These are placed to dry on hard sloping ground, or wooden trays, and afterwards piled; but this operation will only pay where fuel is exceedingly scarce, and the climate tolerably dry.

An improvement on both these methods is now being attempted in Ireland; the wet peat is passed through a kind of conical colander, made of perforated zinc, or other metal—this accomplishes the mashing process very completely, and strains off any sticks or rough particles, leaving the fuel, when afterwards dried, of a very fine and close texture. An ordinary brick machine forms the strained mass into blocks, which it is proposed to dry by exposure to the atmosphere, or by artificial means; but the manufacture is not yet carried on on any extensive scale. Specimens, however, which have been carefully dried seem very compact, and peculiarly adapted for making peat, charcoal, or coke, of a more than ordinary tenacity.

The three foregoing methods have equally the disadvantage of dealing with, and frequently handling eight, nine, or ten tons of substance, for the production of one ton of fuel, and of occupying either immense time and space for air-drying, or burning a large, perhaps ruinously large quantity of fuel to attain an artificial desiccation. Indeed so varied have been the attempts to dry peat altogether by artificial means, that its impossibility may be taken as an axiom. Containing, as usually cut with the slane, about eight or nine parts water to one of peat, it is difficult to conceive how artificial heat, or currents of air sufficient to evaporate eight or nine tons of water, could possibly be obtained by the combustion of one ton of peat fuel, without even expecting any portion of the ton to be saved for sale. Such evaporative duty as one to eight or nine is considered very good, when the best coals are burnt in the furnaces of well-constructed boilers; and although a closed boiler is probably not the best instrument for evaporating a large quantity of water econmically, yet the fact that in peat the water is intimately mixed with an extremely non-conducting substance, renders it probable that in this condition it is even more difficult to effect evaporation than in a closed boiler, where the water is left free to the action of the natural currents produced by heat. Whilst experiencing the difficulty of obtaining a large supply of dry common peat, the Irish Peat Company erected two very large drying-houses similar to those used on the Continent for wood (which, however, when cut, is nearly as dry as air-dried peat). These houses were 150 feet long, 20 feet wide, and 10 feet high, and cost a very large sum of money; they were fitted with furnaces and long flues, and very ingenious arrangements were made to ensure constant currents of air, at one time even a fan blast being used. They were maintained at a temperature of from 100 to 120; and the peat, cut in ordinary sods, was introduced in lattice waggons, which allowed the air free access; but

after protracted trials, and the consumption of much more fuel than could possibly be dried, the attempt with wet peat was abandoned, and others made with partially dry peat; but in no case was even a shadow of advantage gained, and the experiment went only to show that a considerable elevation of temperature, though combined with good artificial currents, will not compensate for the disadvantages of massing large quantities of peat together; thus hindering each portion from giving forth its moisture freely to the unsaturated atmosphere.

The person who first attempted to expel the water from peat by pressure was Mr. Wye Williams, who made an extended experiment with this view at Cappogue many years ago; he succeeded by hydraulic pressure in reducing wet peat to half its original weight and one-third its original volume, but the remaining water was so closely incorporated with the peat that very little time was saved in drying, and the blocks expanded a good deal during desiccation, so as not to be much more dense than common turf. This attempt was lately repeated on a very considerable scale at the Irish Peat Company's works, but with precisely similar results. The idea of drying peat in the ordinary manner, pulverizing it, driving off the remaining water from the powder, and then compressing it, appears to have originated twelve or fourteen years ago, with several persons about the same time, for there are not a few defunct patents on the subject, but their authors all appear to have had the idea that the peat-powder must be hot, and that the combination effected under pressure was to be prolonged by some oily development in the peat itself, due to the heated state in which it was to be fed into the mould, and perhaps a more mistaken or troublesome delusion never hampered a really valuable principle. A few blocks of this dry, hot, compressed peat were produced by hydraulic or screw pressure about this time (*i. e.* previous to 1850), and having a high

density, and burning exceedingly well in consequence of their perfect dryness, it became a question how such were to be produced in quantity, for hydraulic pressure was clearly too slow in action to be of practical use; variations of the lever and eccentric principle were therefore tried, and, by moving them very slowly, some tolerably good blocks were formed but an attempt to drive any of them at a "paying" speed generally resulted in a fracture, and if not, the blocks were found to swell again and become too brittle for carriage. A machine of this kind was placed in the Dublin Exhibition in 1853, and another was set up at a bog in Kerry at about the same time, but never was brought into steady operation, probably from the same cause; it was constructed with a lever actuated by a cam, and was arrested for two or three seconds during the formation of each block. A machine was next constructed by Gwyne and Son, for Mr. Hodgson, and erected in Galway in 1854, but this also was ultimately abandoned from constant failure in the different parts. All these machines suffered from two manifest defects, they were complicated with motions for filling and discharging the mould, in which the pressure was applied, besides the main motion for compression, and when driven at any speed exceeding five or six blows per minute, they failed to produce the desired effect, because the continuance of the pressure became then quite too transitory. But had success attended any of these machines, had any of them produced so much as two or three tons of fuel as dense and as portable as coal, the real difficulty of the actual manufacture would only then have commenced, for no provision had yet been made to supply these machines with dry powder of peat in any paying quantity. It was soon seen that to depend on making and grinding up common peat in this country would never answer, both on account of the small suply to be obtained in any locality, and because even that supply would cost too much to leave a profit on the manufacture.

A patent has lately been taken out for compressing peat, dry and cold, in a machine consisting simply of a horizontal reciprocating ram, working into a tube or cylinder of perfectly uniform bore, very much resembling a cannon with open breach like the Armstrong gun; into this tube the peat powder falls as the ram draws back at each stroke, and very shortly filling the whole length, a considerable friction begins to take place against the sides of the tube; this soon increases to such an extent that as each charge falls in it is consolidated perfectly, between the advancing ram and the column of peat in the tube, before the frictional resistance of this column is overcome, and the whole mass moves on. Thus, simultaneously, a block is formed at the breach end, and one made, perhaps, a moment before drops out at the further extremity.

This machine combines the advantages of requiring no feed and delivery motion; of retaining each block fast in the tube (which is about five feet long), for more than a minute; whilst, at the same time, it delivers them at the rate of sixty per minute, making, for one tube, about fifteen cwt. per hour. It is now at work at Derrylea, and is certainly the first machine which has, in the United Kingdom, produced several hundred tons of peat fuel of a density equal to coal. To supply this machine with dry material now became the grand difficulty, but here a fortunate discovery removed almost all diffiently at one stroke; it was discovered, during last year, that by harrowing over the surface of the bogs, a powdered peat four times as dry as the general mass, would be obtainable cheaply and in any desired quantity. Operating only on the upper structure of the bog and removing a thin layer by two or three successive harrowings and scrapings, each day, the great bulk of the water is never encountered at all, but sinks gradually away, day by day, to the drainage. This operation may be carried on at any season of the year, on every day not actually rainy, but, of course, it proceeds more advantageously in

Summer, when large stores of the powder or mull are collected and heaped in embankments, which are found not to reabsorb water. The average proportion of water is about fifty-five per cent., and the material, when collected, costs about *5d.* per ton; a few hours are allowed to intervene between the harrowing and scraping, so that the air may assist in drying out the thin stratum exposed to it.

The complete desiccation of this powder is easily effected by passing it over extensive plates of iron, heated by the waste steam from the compressing engine, and it is then fit for being compressed. By this mode peat standing in its primitive bog in the morning is harrowed, scraped, brought in, dried on the steam surface, compressed, and before night falls as a complete and excellent fuel into the canal boat which conveys it to market.

[May 14, 1862.]

M. B. MULLINS, Esq., Vice-President, in the Chair.

On the ACTION *of* SEA-WATER *on* LIME MORTAR.—By BINDON B. STONEY, B.A., Hon. Secretary.

LAST year several breaches were made by storms in the retaining wall which supports the north side of the causeway between Ringsend and the Pigeon-House Fort. The heart of the wall facing the Liffey was thus exposed, and proved to be built of calpe rubble stone, with the mortar for the most part washed out from between the stones, so that the wall, which was originally, no doubt, composed of ordinary rubble, was reduced to the condition of a dry wall, and, therefore, quite unfit to resist the impinging action of the waves. The little mortar which still remained was for the greater part reduced to the state of soft putty, which, when dried in the house, became friable, without having the bond of ordinary

mortar. Along with this soft putty was found a smaller quantity of good ordinary mortar, forming in some cases a hard core, imbedded in the softer mass, but generally occurring by itself, in consequence of the softer material having been washed away.

These effects were confined to that part of the wall below high water line, the mortar above resembling ordinary mortar.

Amongst other valuable information relating to the Harbour of Dublin, contained in the Historical Sketch of Engineering in Ireland,* by our late President, M. B. Mullins, Esq., we find that this wall was commenced in the year 1748. It is, therefore, about a century old, and a grave consideration arises, namely, how much dependence can be placed in lime mortar in similar positions, that is, when exposed to the action of salt water, if its duration is to be limited to a century, or if it depends on conditions of which we have but little knowledge, and which are consequently beyond our control. It is a well-known fact that the purer limes, when in contact with sea water for a lengthened period, are liable to an alteration of their chemical constituents, the salts of magnesia replacing those of lime. In connexion with this subject Mr. G. Burnell states, in his *Rudimentary Treatise on Limes*, p. 55, that "Vicat studied the causes of these failures (artificial pozzolanos), and was led by them to some conclusions which may probably explain, not only the disintegration of the limes, but also the destruction of some of the building stones by sea-water. He found in the sea-water a very considerable portion of hydrochloride of magnesia, and he proceeded to experiment upon its action upon the hydrates and imperfect carbonates of lime. He found that in a simple solution of the hydrochloride, the particles which were already

* See Vol. vi., p. 5, *Transactions of Institution of Civil Engineers of Ireland.*

in a state of perfect carbonization remained intact; but that the particles, which were simply in the state of hydrates, passed into that of a soluble hydrochloride, and that the magnesia was introduced into the mass and disseminated throughout the whole tissue. It there quickly passed to the state of a carbonate, with the greater facility when any carbonic acid gas was present. From this Vicat was led to think that the imperfectly carbonated parts of the cements, whose failure led to the investigation, must have taken up the magnesia from the sea-water, and passed to hydro-carbonates of lime and magnesia, similar to the dolomites, whose formation may, perhaps, be accounted for in like manner. This would, of course, be accompanied by a mode of crystallization different from that of the ordinary carbonate of lime, leading, doubtlessly, to the disintegration of the whole mass." Mr. Burnell further adds—"The engineer charged with the direction of the works at Rochfort told me that, besides taking up the magnesia, and passing to the state of a carbonate of lime and magnesia, the mortars at Fort Boyard contained crystals of sulphate of lime. Now, as the sea-water does contain a considerable portion of the sulphate of magnesia, it is very probable that the lime may have absorbed the sulphuric acid thus presented, and given rise to the new combination, which, in its turn, must have contributed to destroy the cohesion of the whole body, for the tendency of the sulphate of lime in crystallizing is known to be expansive."

Having mentioned the condition of the Pigeon-House-road wall to Professor Apjohn, he very kindly offered to analyze specimens of the mortar, of which two were accordingly selected. The first, taken between high and low water, was quite disintegrated and damp, and had the consistency of fresh-made putty. The second specimen was taken from above high water, and had the usual consistency of good ordinary mortar.

The following are the results of the analysis:—

No. 1. Taken between high and low water		No. 2. Taken above high water	
Water,	18·00	Water,	8·40
Sand and pebbles insoluble in muriatic acid,	38·10	Sand and small pebbles insoluble in muriatic acid,	45·50
Peroxide of iron and alumina dissolved by the acid,	1·15	Peroxide of iron and alumina,	1·20
Sulphate of lime,	8·33	Sulphate of lime,	2·68
Carbonate of lime,	8·41	Carbonate of lime,	27·13
Lime,	2·50	Lime,	12·02
Magnesia,	10·89	Magnesia,	·78
Silicic acid (soluble in dilute muriatic acid),	5·34	Silicic acid (soluble in dilute muriatic acid),	4·00
Chloride of sodium and trace of chloride of potassium,	1·50	Chloride of sodium,	·66
Combined water and loss,	5·78		
	100·00		102·37

On this analysis Dr. Apjohn observes, "with a view to the hydraulic quality of a lime, what is of most importance is the amount of soluble silicic acid, for the induration of the mortar depends upon the presence of the silicate of lime which it must of necessity form. The quantity of soluble silicic acid in the two mortars is not far from being the same; but, in No. 2, there is associated with the silicic acid 12 per cent. of lime with a little magnesia, whereas in No. 1 the relative proportion of the bases is reversed, and we have 10·89 per cent. of magnesia and but 2·5 of lime. Such being the case, there is no difficulty in understanding the cause of the disintegration which has occurred to No. 1. Sea-water abounds in chloride of magnesium, which is, in fact, the salt next is abundance to the chloride of sodium. This chloride of magnesium has, by double decomposition, gradually converted the silicate of lime into chloride of calcium and silicate of magnesia, the former of which has been washed away because of its exceeding solubility in water, while the silicate

of magnesia remains in a loose state in the disintegrated mortar. This theory is confirmed by the fact, that the ratio of the number of the atoms of silicic acid to the sum of the number of the atoms of the two bases is the same in the two mortars. In No. 2, for example, the empirical formula is $5{\cdot}3\ RO + S_1O_3$, and in No. 1, it is $5{\cdot}25\ RO + S_1O_3$."

With reference to the sulphate of lime, of which we have 8·33 per cent. in No. 2, and only 2·68 per cent. in No. 1, Dr. Apjohn observes—

"The total lime in the two mortars, when first made, must, I find, have been, in

No. 1, ...	25·82
No. 2, ...	29·87

Into this statement the lime of the sulphate of lime is introduced, for there can be no doubt that this salt was produced by the action of the lime of the mortar upon the epsom salt present in sea-water."

We thus see that Professor Apjohn's analysis of the Dublin mortar corroborates, in a very satisfactory manner, Vicat's theory of the action of sea-water on lime.

It will, further, be interesting to compare the composition of the Pigeon-House-road lime with that of the lias lime-

	Lyme Regis*			Aber-thaw	London†	
Lime, . . .	44·35	79·20	Carbonate of lime,	80·00	65·7	
Carbonic acid, .	34·85		Carbonate of magnesia, . .	2·46	0·5	
Silica and alumina,	17·30		Carbonate of iron,	2·46	6·0	
Water, . . .	3·50		Carbonate of manganese, . .	–	1·9	
	100·00		Clay { Silica,	10·70	18·0	24·6
			Clay { Alumina,		6·6	
			Clay { Oxide of iron,			
			Carbon, water, &c.	4·38	1·3	
				100·00	100·0	

* See Vol. xvii., p. 411, *Proceedings of Institution of Civil Engineers.*

† See *Vicat on Mortars and Cements*, translated by Capt. Smith, p. 221.

	Portland Cement*	
Chalk,	65·33	
Silica,	19·83	29·83
Alumina,	10·00	
Oxide of Iron,	0·83	
Water and Carbonic Acid,	4·01	
	100·00	

stones of Lyme Regis and Aberthaw, the natural cement stone found at Sheppey and Harwich, near London, from which the well-known Roman cement is made, and Portland cement formed artificially of chalk and clay.

Owing to the Pigeon-House-road lime being mixed up with sand to form mortar, we cannot arrive at the composition of the original limestone with the same accuracy as in the foregoing tables; but if we omit the sand, peroxide of iron, and alumina, most of the latter two of which was probably introduced into the mortar along with the sand, we may conclude, from Analysis 2, that the proportion of silica to carbonate of lime, in the original stone, did not exceed the following:—

Carbonate of lime,	93·
Silica (soluble in muriatic acid),	7·
	100·

In the stone from Lyme Regis we have the clay and lime in the proportion of 1 to 4·5; in the Aberthaw, 1 to 7·5; in the Roman cement stone, 1 to 2·7; in Portland cement, 1 to 2·2; and in the Dublin limestone, not more than 1 to 13·3. Hence we may conclude that the latter is only moderately hydraulic, and the action of salt-water on it is an additional fact in confirmation of the statement that none but eminently hydraulic limes are suited for marine

* See Pamphlet on *Portland Cement, manufactured by Knight, Bevan, and Sturge*, London.

masonry; and if, as there is some reason to believe, the hydraulic properties of the lias, and similar limes, be due to the formation of the silicates of both lime and alumina in the mortar made of them, then Portland cement, of which the silica and alumina form so much larger a proportion, ought, *a fortiori*, to make a permanent sea mortar.

Mortar made of the rich or slightly hydraulic limes may appear, as in Algiers, Cherbourg, Dublin, and elsewhere, to set hard at first, and present the appearance of strong mortar; but, as far as our present experience goes, their disintegration in sea-water seems merely a process of time; in some cases, three or four years, in others, as in the present instance, a much longer period elapsed before failure took place.

VOLGA RIVER STEAMERS

Method of Connecting the Sections

THE NEW YORK
PUBLIC LIBRARY
ASTOR, LENOX
TILDEN FOUNDATIONS

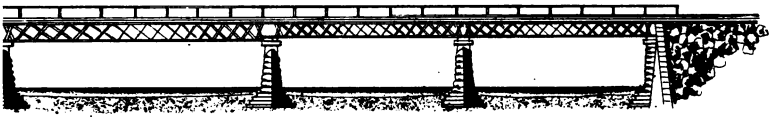

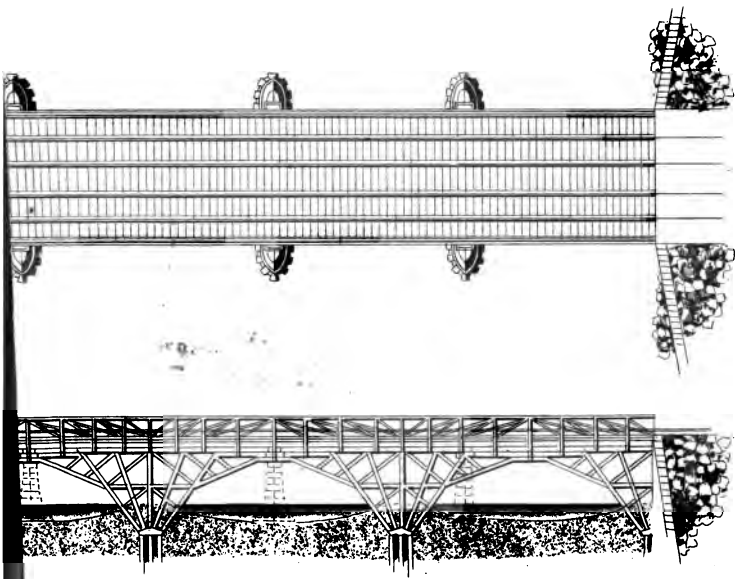

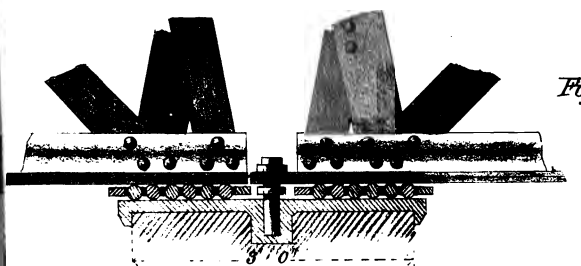

Fig. 7.

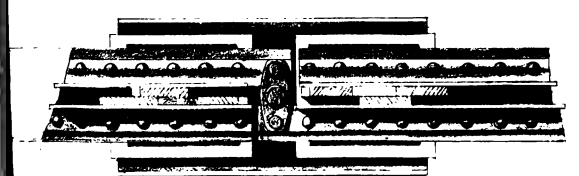

Fig. 8.

RARE

7 0
5

LENOX
FOUNDATIONS

Fig. 3

TRANSVERSE SECTION.

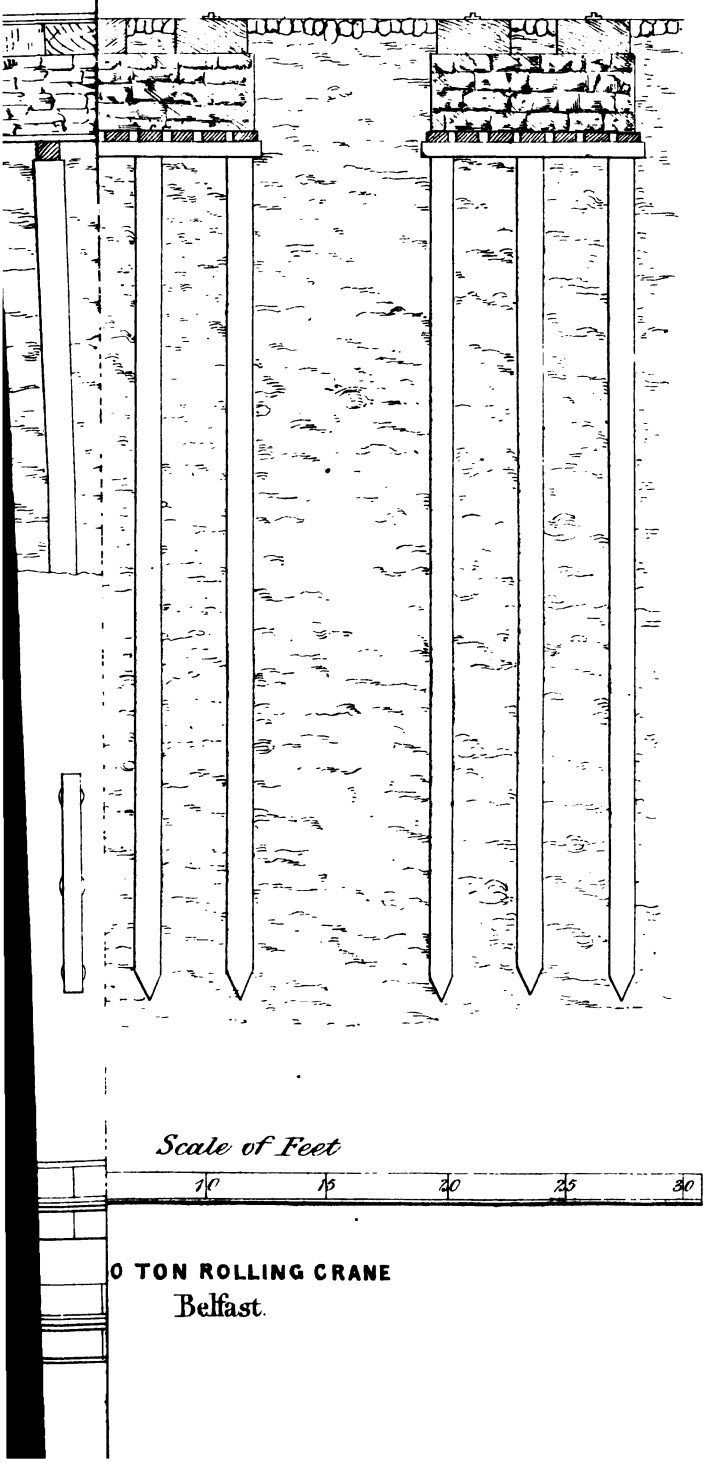

0 TON ROLLING CRANE

Belfast.

YORK
LIBRARY

50 TON ROLLING CRANE
BELFAST.

Vol. VII. Plate 7.

FIG. 1

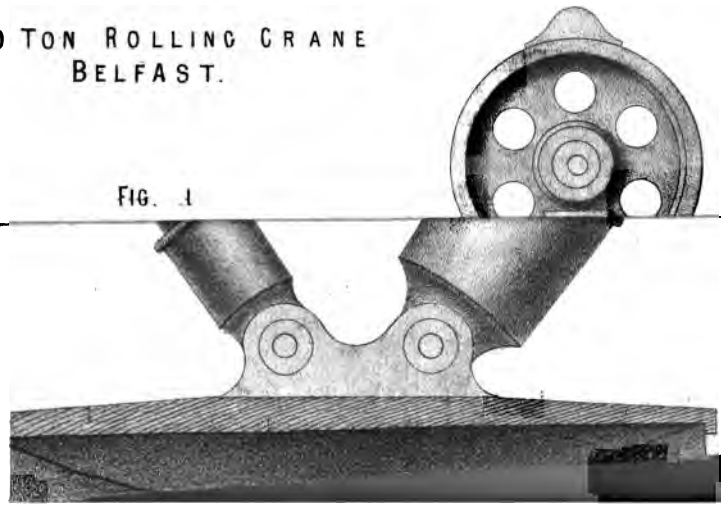

FIG. 2.

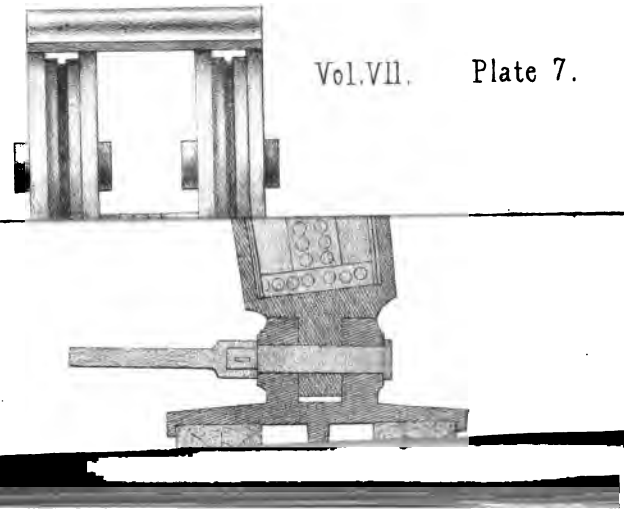

THE NEW YORK
PUBLIC LIBRARY
ASTOR, LENOX
TILDEN FOUNDATIONS

TRANSACTIONS

OF THE

INSTITUTION OF CIVIL ENGINEERS

OF

IRELAND.

28TH SESSION, 1862-63.

VOL. VII. PART II.

DUBLIN:
[illegible]ER, 53, UPPER SACKVILLE-STREET,
[illegible] Stationery Office.

TRANSACTIONS

OF THE

Institution of Civil Engineers of Ireland.

TRANSACTIONS

OF THE

INSTITUTION OF CIVIL ENGINEERS

OF

IRELAND.

27TH AND 28TH SESSIONS, 1861-62-63.

VOL. VII.

DUBLIN:
JOHN FALCONER, 53, UPPER SACKVILLE-STREET,
Printer to Her Majesty's Stationery Office.

1864.

CONTENTS.

PAGE

An Account of the Conveyance of Light-Draught Steamers from England to the River Volga, with Remarks on the Inland Navigation of Russia. By C. H. MOBERLY, Member. . 1

Description of the Madras Railway. By T. H. GOING, Member. 17

On the Relative Advantages of Various Forms of Permanent Way, used in Ireland, especially with reference to Mode of Fastening Joints. By J. PRICE, Member. 34

On the Re-Construction of Malahide Viaduct. By W. ANDERSON, Member. 44

Description of a Fifty-Ton Crane Erected at Belfast. By G. H. STRYPE, Member. 67

On Improvements in the Manufacture of Peat Fuel. By C. HODGSON. 77

On the Action of Sea-Water on Lime Mortar. By B. B. STONEY, Member. 90

[10th December, 1862.]

PROFESSOR DOWNING, C.E., LL.D., in the Chair.

On the Reclaimed Lands *at* Wexford Harbour, *and the* Machinery Employed *in* Draining Them.—By William Anderson, Esq., Member.

The harbour of Wexford, formed by the estuary of the Slaney, is remarkable for the extensive mud banks or "slobs"—submerged at high water only—which encumber it. Upwards of 4,600 acres of these have already been reclaimed, and promise to become valuable property.

The idea of shutting out the sea from the shoals or slobs dates from a very early period; but to J. E. Redmond, Esq., M.P. is due the honour of organizing the first comprehensive scheme which, with the co-operation of William Dargan, Esq., Sir Edward Grogan, M.P., the late J. Maher, Esq., and others, has since been successfully carried out.

In 1846 an Act was obtained for constructing five embankments, with the view of enclosing nearly all the mud banks, and confining the waters of the Slaney in narrower bounds, so that the increased scour, assisted by dredging, might create a permanent deep channel.

James B. Farrell, Esq., who was appointed the Harbour Improvement Company's Engineer, at once commenced the works on the north side (See Map, Plate IX.) by constructing an embankment, beginning close to the public road near the ruins of Ardcavan Church, and running straight for 1,600 yards to Big Island, and thence curving slightly to the southward 1,830 yards, to the Raven Point, which is the southern extremity of the range of sand-hills forming the eastern boundary of the reclamation.

It is worthy of notice that in the Admiralty Chart of 1640 these sand-hills are marked "dangerous shoals" out at sea, and the main entrance into the harbour appears to have been at Curacloe, through the Begern Channel, over what now are fertile corn fields. A cross section of the embankment is given (Plate X., Fig. 1); its total length is 3,430 yds.; the crest, which is 6 ft. wide, rises 13 ft. 6 in. above low water at spring tide; the slopes are $1\frac{1}{2}$ to 1 on the sea, and 1 to 1 on the land side, the former being protected by stone pitching. A road 18 ft., and drain 4 ft. wide, are carried along the base on the land side. The materials used were clay and marl, brought from Big Island and Ardcavan, entirely by cart and boat labour, without the intervention of a contractor. In 1849 M. E. Talbot, Esq., C.E., was appointed Resident Engineer. Under him the embankment was finished, and a catchment drain, $4\frac{1}{2}$ miles long, about 4 ft. deep, and 10 ft. wide at the bottom, was constructed, to intercept the waters of the main land which it skirts, preserving a dead level. It is strongly embanked on the side of the reclaimed land, and discharges all its waters through tidal gates into the harbour, the sand hills at its eastern extremity precluding a division of the outfall. It serves to carry off the watershed of 2,133 acres, and is made of uniform width throughout, in order that it might act as a reservoir during such times as the outfall was prevented by high water. The result of these operations is the reclamation of 2,220 acres of excellent land, added to which are 155 acres in what once were islands, and 114 acres of old navigable channels; making a total area of 2,489 acres enclosed. As soon as the embankment was completed, the dredging of the channel, on the places indicated on the map, was pushed on vigorously for two years, with favourable results, till, in 1852, the Harbour Improvement Company, finding that they had undertaken more than their means would enable them to perform, obtained an Act by which they became the Wexford

Harbour Embankment Company, with powers limited to the reclamation of land; they were released from their engagements relating to the harbour, in consideration of £20,000, to be paid in instalments to the Amiralty, who undertook to carry out the improvement of the navigation themselves, appointing Mr. Farrell their Engineer.

Under this Act the works were resumed; W. R. Le Fanu, Esq., C.E., was appointed Consulting Engineer, Mr. Talbot remaining, as before, in sole charge of the works. Operations were commenced on the south side by entering into contracts for an embankment 2,580 yds. long, running from Drinagh to Wood Island, generally east and west, though carried somewhat convex to the northward, in order to avoid crossing a deep part of Coal Channel. A cross section of this embankment is given (Plate X., Fig 2); the dimensions are similar to those of the north side; but the sea face is curved to prevent the waves running up to a height which was there found objectionable. This embankment, the position of which was greatly influenced by the scarcity of proper materials, was run out by means of tramways and earth waggons. At a quarter of a mile from Drinagh some difficulty was experienced in crossing a soft spot where no foundation could be reached 66 ft. below the surface, the boring rods bringing up from that depth turf, and perfectly sound chips, apparently of alder wood. Immense quantities of clay were thrown in, giving rise to an interesting question in the measurements, the contractor claiming to be paid on the supposition that the slopes of the bank extended unaltered the entire depth. It was proved by boring as well as by the tale of the waggons (which had, fortunately, been kept), that the bank went down either with parallel or slightly converging sides. The embankment was brought up from both ends to the margins of Coal Channel, at a point where it is 400 yds. wide and 14 ft. deep. A rough viaduct of native timber,

in 16 ft. spans, was carried across, and a breakwater of crescent shape was constructed on the seaward side, the ends lapping and abutting on the bank already formed. It was made by bringing the stone, prepared for pitching the sea face, in boats and throwing them in loosely to the level of high water at neap tide, with the intention of mitigating the velocity of the current—not of making a perfect dam. These preparations completed, the clay was run in, night and day, between spring tides; and the closing up of the bank was accomplished without any difficulty or accident. Three sluices, 3 ft. 6 in. broad, 18 in. deep, with tidal flaps, were set in the bank, their upper sides being level with low water of spring tides, to enable the imprisoned sea to escape. The ends of the piles and spur shores were cut off where they projected above the face of the bank; the breakwater was taken up and used, as intended, in pitching the sea face. A catchment drain, 10 miles long, skirts the main land. As on the north side, it is quite level, but discharges its waters at either end, and varies in breadth of bottom from 4 ft., at its source, to 12 ft. at the outfall. About 6 miles are still but partially excavated. It carries off the watershed of 8,000 acres. 1,996 statute acres of land and 200 acres of water in old channels are the results of the operations described. There is, in addition, a small plot of 214 acres reclaimed by Major Boyd a few years before, and the remains of an embankment attempted some fifty years ago by a Mr. Thomas, may be seen intersecting the new works as shown on the map. This embankment failed in consequence of being built of sand, facines, and clay, mixed together. The dotted lines on the map indicate the reclamations originally contemplated by the company, but not as yet carried out.

The chemical properties of the lands thus brought within reach of the farmer are given in the analyses of four specimens submitted, in 1851, to Professor Sullivan, Chemist to the Museum of Irish Industry:—

ANALYSES.

Specimen No. 1 was taken north of the road under Begern stables; No. 2, under Newell's house, Ballyla; No. 3, North Hook passage, under Carrygibben; No. 4, residue of No. 1, found in the bottom of road and other drains.

	No. 1	No. 2	No. 3	No. 4
Potash	0·041	0·111	0·098	0·082
Soda	0·187	0·485	0·221	0·246
Lime	0·152	0·231	0·213	0·286
Magnesia	0·177	0·253	0·604	0·243
Alumina	2·188	4·669	3.334	7.055
Peroxide of iron	1·364	3·055	1·525	2·832
Protoxide of iron	1·169	2·563	2·021	0·371
Phosphoric acid	0·063	0·103	0·098	0·055
Sulphuric acid	0·404	0·588	0·396	0·293
Hydrochloric acid	0·015	0·073	0·021	0·025
Silica existing in combination, decomposable by hydrochloric acid	5·984	13·958	9·547	6·758
Clay or silicates undecomposable by hydrochloric acid	15·439	52·334	34·679	9·631
Silicious sand	66·649	8·354	37·957	65·815
Water not driven off at 212, and organic matter rich in nitrogen	5·607	12·137	8·707	4·809
Carbonic acid and loss	0·561	1·086	0·579	1·499
	100·000	100·000	100·000	100·000

In his comment on the analysis Professor Sullivan remarks:—

"In most of the soils a large part of the iron exists in protoxide, which, from the facility with which it is taken up by weak acids, is always injurious to vegetation. A great part of the silica, which is present in larger quantities than is usually the case, exists in combination with iron, a form in which it is very injurious to plants. The only cure for these evils is exposure of the soil to the atmosphere, and limeing. The latter operation will be attended with many benefits, as the quantity of lime present is very small. A heavy limeing is not, however, necessary or desirable."

For the following remarks on the agriculture of the mud-lands the author is indebted to C. W. Palliser, Esq., the gentleman who, for nine years, has managed the property:—

"For the first three years after the reclamation on the north side was completed, the lands were put under corn crops, with very slender success, many parts being perfectly barren. Where crops did grow well, there was a considerable admixture of sand or gravel in the mud. The limeing recommended by Professor Sullivan was resorted to, to the extent of twenty barrels (of 280lbs.) to the acre, with very encouraging results, converting barren into productive land. Later on the limeing was increased to from forty to fifty barrels per acre, by which means luxuriant crops, particularly of wheat and barley, were grown. Green crops, clover and grasses, answered admirably, and the pasture improved in fattening qualities. The drainage, up to the present, is still deficient, the water never having been more than 3 ft. below the surface; but when, with the assistance of the new machinery, the water is kept down 5 ft. or 6 ft., the value of the land will rise from 25 to 30 per cent. The experience of nine years in the management of the north side, together with some experimental farming on a very small scale on the south side, and an analysis indicating somewhat better land, justifies the conclusions that it requires the same treatment. The land should be turned up deeply by steam ploughing, for which it is peculiarly adapted, left to lie fallow for a year, and then heavily limed. After such treatment abundant crops may be certainly expected." Fortunately there is an abundant supply of limestone on the south side; it is brought to the limekilns, at a very low rate, by small sailing lighters or "cots," as they are there termed.

The rise and fall of the tides at Wexford is very inconsiderable, being 3 ft. for neaps and 5 ft. for springs. These

are affected, besides, by the direction of the wind. A strong E.S.E or S.E. gale raises the water two or three feet above the normal level; wind in the contrary direction, on the other hand, prevents the rise of tides. In consequence of this, it is impossible to get sufficiently deep drainage by means of tidal sluices, and pumping has to be resorted to. The water to be removed may be said to consist exclusively of the rainfall, as the leakage through the banks and the flow from natural streams is inconsiderable. The rainfall for the last two years, as indicated by the rain gauge placed at Breast Island, about 6 ft. above the ground, is given in the following table:—

	1861	1862
	in.	in.
January	3·84	8·25
February	6·45	1·55
March	2·57	4·65
April	1·57	4·72
May	0·32	3·40
June	3·22	3·50
July	6·79	4·25
August	5·39	2·36
September	5·22	3·10
October	3·31	3·87
November	3·12	4·18
December	3·78	4·60
	45·58	48·43

There seems to be considerably more rain on the mudlands than two or three miles higher up the river, for Mr. Farrell's gauge on the north side of the town indicates only 26·5 in. as the mean of the last four years; he considers, however, that this is hardly sufficient, as the gauge is placed at a considerable height above ground. One inch of rainfall is equal to 101½ tons of water per acre. About one-fourth of the total rainfall of 45·58 in. can be counted on as absorbed by vegetation and the soil, or dissipated by evaporation, so that 34·2 in., or

3,468 tons of water per acre, have to be pumped up annually, amounting, on the north side, to 23,645 tons, and on the south side to 20,862 tons per day.

The first pumping station erected was that on Breast Island, to drain the north reclamation. It consists of a scoop-wheel, 30 ft. in diameter, 6 ft. wide; buckets 6 ft. deep, with close sides and bottoms, driven by a side-lever marine engine, working at 5 lbs. steam pressure. The performance of this machinery was very unsatisfactory, partly from the defects of the engine, but mainly from the malformation of the wheel, which, in consequence of the depth and insufficient rake of its buckets, lifts a large proportion of the water several feet higher than is necessary. When it became requisite to erect a pumping station on the south side, Mr. Talbot instituted experiments to guide him in the design of the new scoop-wheel. He lined up several of the buckets, so as to alter the depth and rake of floats, and by repeated trials arrived at the proportions finally adopted. The pumping machinery at Drinagh, lying at the N.W. corner of the south reclamation, is composed of a scoop-wheel, 40 ft. diameter and 10 ft. broad, driven by a condensing engine, with a 36 in. cylinder, 6 ft. stroke. The general disposition of the engine-house, scoop-wheel, boiler-house, channel, and sluices is shown in the block plan (Plate X., Figs. 3 and 4). The steam engine is of the ordinary beam class, presenting no peculiarities beyond the steam and exhaust valves, which are double beat, being worked by cams keyed on a cam shaft passing under the floor in front of the valve chests. A variable rate of expansion can be given at pleasure by sliding the cams on the shaft by means of a handle conveniently fixed near the starting levers. The engine, as already stated, has a 36 in. cylinder, 6 ft. stroke, and is intended to run at the rate of twenty-five revolutions per minute. The steam is used at about 13 lb. pressure per square inch; but it is very much to be regretted

that an engine so admirably adapted for a high rate of expansion should not be worked up to 50 lb., cutting off at one-eighth or even one-tenth. The boiler-house is constructed to accommodate three single-flue Cornish boilers, 21 ft. 6 in. long, 5 ft. 9 in. diameter, with flues 2 ft. 10 in. diameter. Two boilers only have, up to the present, been erected; the third not being necessary for the working of the engine. The whole of the steam machinery, which is very well designed and constructed, was erected by the Irish Engineering Company, Seville Works, Dublin. The scoop-wheel (Plate X., Figs. 5 and 6, Plate XI.,) consists of a hollow cast-iron shaft, 13 in. diameter, working in brass bearings, 12 in. diameter, 1 ft. 4 in. long, and having three cast-iron spoke centres, 6 ft. diameter, keyed on it with eight keys each. This shaft is cast of Crevalea (Irish) iron. Twenty flat wrought-iron spokes radiate 14 ft. from the periphery of the centres, into which they fit, being keyed into taper sockets. A ring of flat iron, 34 ft. external diameter, connects the ends of the arms; to it and a second smaller ring, 28 ft. external diameter, are riveted flat iron float spokes, bent to give the buckets the proper rake. The spokes next the engine-house are considerably stronger than the other two set, and have their ends enlarged to receive the segments of the annular spur-wheel, 31 ft. 6¼ in. diameter, 10½ in. wide, and 3½ in. pitch. Besides being securely bolted to the arms, the segments of this wheel, and through them the entire structure is stayed and stiffened by twenty diagonal braces, 1¾ in. diameter, with screwed ends secured to the annular wheel at one end and the external spoke centre at the other. A spur pinion, 5 ft. 3½ in. diameter, flanged on one side of the teeth, is keyed on the fly-wheel shaft of the engine, and gears into the annular wheel 7 ft. below its centre on the discharging side, by which arrangement the weight of water is borne directly by the pinion. The float boards are all drawn tangents to a circle 13 ft. in

diameter, and are formed of 3-in. Memel planks, grooved and tongued with flat iron, and secured by means of hook bolts to the float spokes already described; a 9-in. backboard is similarly secured to the middle ring, while the ends of the float spokes are kept in place by a flat iron ring 38 ft. 8 in. external diameter. There are forty floats, each measuring 9 ft. 11¾ in. long, by 3 ft. deep, and the backboard is 9 in. high.

The masonry is very carefully dressed to fit the wheel very accurately, the clearance not being more than ¼ in. or ⅜ in. The water is delivered over a crest 4 in. broad, exactly 11 ft. higher than the bottom of the race under the wheel, and 3 ft. 6 in. below high water of spring tides. The channel drops 1 ft. 3 in. immediately behind the crest, and has an inclination of 6 in. in its length. A pair of tidal gates at its seaward end prevent the entrance of high water, while a second pair of sluices are placed half way between them and the wheel, as an additional precaution. The water is admitted to the wheel by cast-iron sluices, which are worked by means of shafts and bevel gear from the engine-house. The channel from the wheel to 8 ft. outside the inlet, is perfectly level; it is 10 ft. 7 in. wide on the wheel side, and 11 ft. 7 in. on the outside of the sluice, the sill of which is 3 in. higher than the bottom of channel.

The details in this respect, which are important with reference to the experiments to be described, are fully shown (Plate XI.). At twenty-five strokes of the engine the wheel makes four and a half revolutions per minute, giving a velocity of 9·42 ft. per second to the tips of the floats, at which rate the wheel will raise 170 tons of water per minute, and pump out the rainfall of a year in about sixty-three days of twelve hours. The old Coal Channel acts as a reservoir, the water in it rises about 8 in. for every inch of rainfall, so that even the extraordinary down-pour of 6 in. in one month, which would raise the channel only 4 ft., could be pumped out in nine days. The object in making this pumping station so

powerful was to provide for large additional reclamations, to avoid the necessity of always keeping it at work, and to enable one set of men to attend to both sides of the harbour. The Drinagh scoop wheel, which is believed to be one of the largest in existence, was built by Messrs. Courtney, Stephens, and Co., of Dublin, the firm with which the author is connected. It weighs 34¼ tons (cast iron, 18 tons 3 cwt.; wrought iron, 14 tons; timber, 2 tons 2 cwt.), and the pinion, 1½ tons. The contract price was £760—very nearly £6 per horse-power, taking 170 tons of water lifted 11 ft. per minute as the greatest duty performed. The total cost of the pumping station is not accurately known, but is estimated at £5,000, or about £40 per horse-power measured as described. On the 11th January, 1861, the author, in company with Mr. Talbot, and Mr. James Easton, of London, made some careful experiments, with a view to determining the economic value of this form of pumping machinery. The engine and wheel being in perfect order, indicator diagrams were taken at short intervals, first from the top, and later from the bottom of the cylinder. The speed of the engine, the opening of the sluice, and the level of water in the channel outside it, were carefully noted at the same time, the three observers checking their notes on the spot. It unfortunately occurred that the drains were very full, so that, on raising the inlet sluice, the water rushed out to the wheel at a charge of 8·4 ft., and, therefore, with a velocity of 23 ft. per second. A space of 22 ft., however, intervened between the sluice and the wheel, and it was observed that on reaching the floats there was no tendency to run up them; that, in fact, the velocity was as nearly as possible that of the floats themselves, viz., 9·42 ft. per second, or that due to a fall of 1·4 ft. Had the wheel been working in still water this velocity would have to be imparted by the steam engine; it is, therefore, necessary to deduct 1·4 ft. from the apparent lift of the wheel, leaving 9·6 ft. as the real height

to which the water was raised by the engine. The experiments, and the results calculated from them, are set forth in the following table :—

1	2	3	4	5	6	7	8	9	10	11	
Time	No. of Diagram	Mean pressure from diagram	Speed of piston in feet per min.	Horse-power developed in cylinder	From surface of water in drains to cill of sluice h_b	Opening of sluice; breadth, 4 ft. 11¾ inches	From surface of water in drains to level of water in wheel-race h	Cubic feet of water discharged per minute	Horse-power required to raise water 9·6 feet	Ratio per cent. of effect to power expended	
P.M.		lb.	feet		ft. in.	feet	feet				
12·15	1	13·99	318	137·0	9 0	1·333	8·25	5316 24	96·488	70·43	Top of cylinder.
12·30	2	14·24	312	136·8	9 0½	1·302	8·292	5212·08	94·599	69·15	
12·45	3	14·50	300	134·0	9 0½	1·302	8·292	5212·08	94·599	70·59	
1·00	4	14·68	306	138·4	9 0¼	1·302	8·271	5204·52	94·461	68·25	
1·15	5	15·41	297	141·0	9 0¼	1·302	8·271	5204·52	94·461	66·99	
2·30	6	15·82	300	146·2	9 0	1·302	8·250	5196·17	94·308	64·50	Bottom of cylinder.
2·36	7	15·31	306	144·3	8 11¾	1·323	8·229	5274·74	95·735	66·34	
2·48	8	14·51	300	134·1	9 0	1·260	8·250	5040·74	91·488	68·22	
3·6	9	14·77	300	136·5	9 0	1·302	8·250	5196·17	94·308	69·09	
3·12	10	15·33	300	141·6	9 0	1·302	8·250	5196·17	94·308	66·60	
3·20	11	15·72	300	145·2	8 11¾	1·406	8·229	5592·52	101·503	69·90	
									Mean,	68·19	

On comparing Nos. 3 and 8 it will be seen that the mean pressures indicated by the diagrams and the speed of piston were very nearly the same. On laying one diagram over the other, it was seen that they coincided very nearly, although taken from opposite ends of the cylinder, so that no error of any consequence results from assuming the power in the up and down stroke to be the same. The calculations for the quantity of water passing through the sluice are complicated by the circumstance that the orifice was partly submerged, and the edges are not all in the same plane. Feeling incapable of determining the proper co-efficient of discharge, the author applied to a member of this Institution who has rendered his name famous in connexion with hydraulics—John Neville, Esq., of Dundalk, who in the most obliging manner took the trouble of examining the nature of the case, and giving his opinion in the following words:—" I considered carefully your

tracing and sketches of the sluices, and the channel between them and the scoop-wheel, for draining the reclaimed lands at Drinagh, Wexford, and I estimate the mean value of the co-efficient of discharge (C_d) in formula 51 of my book, applicable in this case to be about 0·585, and the effects of the backwater to extend about half-way up on the sluice." The formula referred to:—

$$D = C_d\, l\, d_2 \sqrt{2\, g\, h} + C_d\, l\, d_1 \sqrt{2\, g\, (h_1 + \frac{d_1}{2})}$$

will be found, Sec. V, page 141 of the new edition of Mr. Neville's book, and has been used in computing column 9 of the table. The quantities l, d_1, d_2, h, h_1, will be understood by reference to the drawing of the sluice in Plate XI., C_d, has been taken equal 0·585. The specific gravity of the water, which was slightly saline, was ascertained to be 1·00112.

It appears, then, that a useful effect of 68·2 per cent. is realized; the loss from all causes, including the friction of the engine, being 31·8 per cent. The consumption of fuel has never been accurately ascertained during steady running, but has averaged 5½ cwt. per hour, or nearly 4½ lb. per indicated horse-power. This is not satisfactory, but a glance at the diagrams (Plate X.) explains the cause, for the steam is not cut off sooner than half stroke, and the exhaust valves close too early. If higher pressure were employed, with a sharper cut off and better adjusted valves, the consumption might be reduced to 3¼ lb. per horse-power, or very little over 4 cwt., and the duty done would be about 400,000 lb. raised one foot by 10lb. of coals. It may at first sight appear that the leakage between the floatboards and the masonry must be very considerable; this is not really the case, because the water does not half fill the space between the buckets, and, consequently, the leakage only takes place under a very small head from bucket to bucket. The defects of the scoop-wheel as a means of raising water under variable lifts are very obvious. It is true that

arrangements might be made for accommodating the lip of the wheel to the variations of the tide, but this would entail complicated machinery. It would be very easy, however, to take advantage of the rise of water in the drains by arranging the inlet sluices as in a Poncelet undershot water-wheel, and so utilising the rush of water which, in the present arrangement, is almost lost. The weight and bulk of the machinery also require costly foundations, often very difficult to obtain in marsh lands, and the wheel is very easily damaged by the accidental introduction of any solid matter. In all these respects Messrs. Easton, Amos and Sons' patented arrangement of the Appold centrifugal pump, which has recently been erected on the north reclamation, to replace the old Breast scoop-wheel, presents great advantages, as may readily be inferred from the fact that, in the face of the excellent performance of the Drinagh wheel, the proprietors have adopted the modern drainage engine.

The position of the old scoop-wheel on Breast Island proved to be badly chosen, on account of the silting up of the channel leading the water to it. The new Appold pump has therefore been erected on the eastern margin of Begern channel, a few yards back from the embankment. Plate XII., Figs. 1, 2, and 3, are a plan, longitudinal and cross sections, showing the general arrangement of the engine and boiler-house, culverts, and sluices. The peculiar construction of the steam-engine and pump, in a self-contained cast-iron case or frame, is patented by Messrs. Easton, Amos and Sons, and is specially suited for marsh lands, where it is commonly very difficult to obtain reliable foundations; failing which, machinery, supported on detached masses of masonry, as at Drinagh, would speedily get out of adjustment. The pump itself is a fan of galvanized sheet iron, 4 ft. in diameter, 1 ft. 3 in. deep, with a diaphragm in the middle of its depth, revolving in a cast iron case (Plate XII., Fig. 2). Two suction pipes convey

the water to central orifices above and below the fan. The curved blades whirl it out, and cause it to rise in the metal case till it reaches the level of overflow into the sea. The vertical pump spindle, which revolves 133 times per minute, is actuated by a bevel pinion of forty-three teeth, gearing into a mortice bevel fly-wheel of 114 teeth, keyed upon a crank shaft resting across the centre of the pump-case, in strong standards, bolted on each side of it. Motion is given by means of a pair of direct-acting condensing engines, having cylinders 18¼ in. diameter, 24-in. stroke, capable of working under 50 lb. steam, at a high degree of expansion, the cut-off being effected by the double slide valve arrangement. The piston-rod cross-heads are guided by grasshopper parallel motion, the beams of which work the air and feed-pumps The proper speed of the engine is fifty revolutions per minute. Steam is generated in one Cornish boiler, 6 ft. 6 in. diameter, 22 ft. long, with the furnaces in two internal flues, 2 ft. 6 in. diameter. Provision has been made in the boiler-house for a second similar boiler. The mouth of the inlet culvert is protected by a close iron grating, and provided with rebates in each wall for the reception of planks, to form a dam, in case it is desired to exclude the water from the pump. To the pump-case on the outlet side are hinged, on a vertical axis, a pair of self-acting sea-gates; similar ones, but much stronger, fixed in a massive metal frame imbedded in masonry, guard the sea end of the outlet channel; and, to provide against accident to these, a sluice, actuated by rack and pinion, is introduced just behind the embankment, 12 ft. back from the outer gates. The pump being placed below the lowest level to which it is ever contemplated to reduce the water on the lands, does not require to be charged. The inlet and outlet culverts being very large, the water passes out at an extremely moderate velocity; the difference of level in the engine-house and at the outer sea gates, a distance of 80 ft.,

being only one inch. The bottom of the outlet culvert is sunk 4 ft. 3 in. below low water of spring tides, so that the pump only rises the water one inch higher than the sea level in all conditions of the tide, wherein consists one of the chief merits of this form of drainage engine. It is not the author's purpose to enter into details regarding the form and construction of the Appold pump; it is sufficient to state that it possesses the property, speaking roundly, of absorbing the same amount of power at every variation of lift, provided the speed be constant; in other words, the quantity of water delivered is inversely as the lift, so that the machine is self-regulating; and, moreover, the greater the emergency pressing in the shape of flooded lands, the greater becomes the quantity delivered by the pump. The contractors having undertaken to discharge certain quantities of water at specified lifts, with a given consumption of coal, the author was directed by the proprietors to institute experiments to test the performance of the pump.

On the 19th February, 1863, a weir or notch was constructed of 4-in. plank, just where the inlet branches from the Begern channel. The planks forming the weir had a gap 14 ft. long, 1 ft. 6 in. deep, cut in them, the bottom and sides of which were bevelled off on the lower edge at an angle of 45°, leaving a crest 2 in. wide. The dam was let about 12 in. into stiff mud, the upper side and ends were carefully puddled, and the bed of channel on the lower side securely pitched with large stones to resist the scour of the overfall. As soon as all the preparations were completed, a plank was fixed across the notch, and the tightness of the dam and sides of channel satisfactorily proved by pumping out all the water below it. The greatest pains were taken to ensure accuracy of observation. A plan and longitudinal section of channel and weir were made (Plate XII., Figs. 6 and 7), stakes *a* and *b* were driven 13 ft. and 26 ft. from the weir, respectively, for observing the velocity of

approach; another, *c*, 45 ft. from the weir, for gauging t heads in still water, from a bench mark, referred to the cr of the weir by carefully measuring from the surface of t still water when the pump was not in action. The power the engines was determined by taking indicator diagrams w Richards' high-speed indicator, one fixed to each engine means of pipes, which could be made to communicate pleasure with the top or bottom of the cylinders by mer turning two cocks, so that diagrams of the up and do strokes were taken within three or four revolutions of ea other. The method of conducting the observations was follows:—The engines having been got to a steady speed, t heads, velocity of approach, and lift, were measured; the fo indicator diagrams traced; the number of revolutions asc tained; and, finally, the heads and lift checked. The day which the experiments were made was very calm and bright

In Table No. II. are given all the observations made, a the results calculated from them.

TABLE II.

1	2	3	4	5	6	7	8	9	10	11	12	13
No. of experiment	Hour of the day, February 19, 1863	Pressure of steam in boiler in lbs.	Mean pressure of steam on pistons calculated from indicator diagrams	No. of revolutions of engines	Breadth of weir	Time occupied by ball floating 26 feet	True heads in still water: 3-16 less than observed heads	Heads on crest of weir: Upper edge	Heads on crest of weir: Lower edge	Cubic feet of water falling over weir per minute—coefficient, 0·617	Lift of pump	Horse-power of water
					ft. in.	secs.	in.	in.	in.		ft. in.	
1	12·30	30	15·56	50	11 11 3/8	—	10·625	8 3/4	—	1971·65	7 11	29·50
2	1·	33	16·81	50 3/4	13 11 1/2	16	10·25	8 7/16	7 13/16	2182·36	7 4	30·25
3	1·30	31	14·79	47 1/2	,,	18	9·938	8 1/16	7 7/16	2083·57	6 2	24·28
4	1·55	32	14·56	47 1/4	,,	16 1/2	9·688	7 7/8	7 3/16	2004·86	6 4 1/4	24·07
5	2·20	32	14·85	47 3/4	,,	17	9·563	7 5/8	7 1/4	1966·78	6 10 1/2	25·55
6	3·30	33	15·84	50 1/2	,,	—	9·25	7 9/16	6 15/16	1870·88	7 9	27·40
7	4·10	32	15·53	47 1/2	,,	17 3/4	9·094	7 3/8	6 13/16	1824·43	7 5 1/8	25·71
8	4·30	35	16·01	51	,,	17	8·938	7 5/16	6 3/4	1777·16	8 2 1/8	27·49
9	4·50	35	15·03	50	,,	18	8·875	7 5/16	6 5/8	1758·43	8 2	27·14
10	5·30	32	15·56	50	,,	17	9·688	7 1/16	6 1/2	1703·13	8 7	27·63
11	5·40	36 1/2	16·79	53 1/2	,,	too dark	8·563	7	6 7/16	1666·50	9 7	30·17
12	6·5	33	15·44	53 1/2	,,	too dark	8·5	6 7/8	6 5/16	1648·05	10 1	31·41
13	6·25	35	17·02	54 1/2	,,	too dark	8·5	6 13/16	6 1/4	1648·05	10 2	31·67
Deducting 1/6 of indicated power as resistance of engines, mean duty of pump appears 67 per cent., ...												27·86

Column 7.—It will be seen, on reference to Plate XII., Fig. 7, that the bottom of the channel leading up to the weir was not very much below its crest, and very irregular in section. The velocity with which the water approached the overfall was, in consequence, considerable; and, as part of the observed head in still water was expended in producing it, or in other words, in overcoming the resistance of the channel, it became necessary to determine the amount by observing the velocity of the current. This was done by noting the passage of a 3-in. wooden ball—loaded with lead till it barely floated—past the stakes *a*, *b*, placed 13 ft. and 26 ft., respectively, from the weir.

Columns 8, 9, 10, 11.—The spot *c*, selected for measuring the heads in still water, was at such a distance from the weir that no perceptible variation of level was found to take place, whether the pump was in action or not. The heads measured here, however, are reduced by three-sixteenths of an inch, found to be expended, as already explained, in overcoming the resistance of the channel. In order to obtain data for arriving at the true volume discharged by independent methods, the heads were also measured vertically on the upper and lower edges of the crest; and further, four measurements were made by means of ordinates from a horizontal line, to determine the curve of the upper surface of the overflow. These are given in Table III., which refers to Plate XII., Fig. 8.

TABLE III.

	a	*b*	*c*	*d*	*e*	*f*	*g*	*h*	*i*	Still Water
1	—	$4\frac{7}{16}$	$7\frac{1}{2}$	$8\frac{3}{4}$	$9\frac{1}{8}$	$9\frac{1}{2}$	$9\frac{11}{16}$	$9\frac{3}{4}$	$9\frac{31}{32}$	$10\frac{7}{16}$
2	—	$3\frac{3}{4}$	$7\frac{9}{16}$	$8\frac{3}{16}$	$9\frac{1}{8}$	$9\frac{5}{16}$	$9\frac{13}{32}$	—	—	$10\frac{5}{16}$
3	$2\frac{5}{8}$	$3\frac{13}{16}$	$7\frac{1}{32}$	$7\frac{9}{16}$	$8\frac{1}{8}$	$8\frac{1}{2}$	$8\frac{21}{32}$	$8\frac{23}{32}$	$8\frac{3}{4}$	$9\frac{7}{16}$
4	$3\frac{11}{16}$	$3\frac{1}{16}$	$6\frac{3}{8}$	$6\frac{15}{16}$	$7\frac{9}{16}$	$7\frac{29}{32}$	$7\frac{13}{16}$	$8\frac{1}{16}$	—	$8\frac{3}{4}$

The co-efficient selected 0·617 is that applicable to a thin plate, although the crest was 2 in. wide; it is necessary, therefore, to explain that the author observed that the lower edge of the notch was not wetted after the stream had assumed a certain thickness; but, on the contrary, the water curved up, as represented in Plate XII., Fig. 8, at *c*, and to such an extent that a rule three-eighths of an inch broad could be laid on the lower edge of the crest, showing that the contraction was complete along the whole border. Being most anxious to base his calculations on good authority, the author again applied to Mr. Neville for advice, and obtained the following reply to a letter containing an account of the experiments:—

"JOCELYN-STREET, DUNDALK,
March 20th, 1863.

"MY DEAR SIR,—Owing to various professional engagements I could not enter earlier into the subject of your letters of the 25th and 28th ult., respecting the quantity of water discharged by Appold's centrifugal pump, erected by the proprietors of the Wexford Reclamations. The plan and sections you furnished me with of the weir, reservoir, and overfall, the observations on the heads over the crest, and the forms of the approaching water sections, have been all given with a carefulness which observers frequently neglect, and there is, therefore, little difficulty in arriving at the quantity of water discharged, the value of the co-efficient, and the correction of the head required, before applying it. The observations show that the contraction over, and at the sides of the weir, was complete, and, therefore, the co-efficient is that due to a thin plate placed under the same circumstances. The head producing the overflow is not, however, that taken at still water at *c*, about 33 ft. up the channel, measured at right angles to the weir, but that head reduced by the height due to the resistances caused by friction and variations of section betwixt the weir and *c*. Now, the observed velocity of approach being from 15 in. to 19 in. per second, it is not difficult to show that the head due to these resistances approximates to three-sixteenths of an inch, in all of the experiments. This, therefore, will have to be taken from the observed heads at *c*, to find those acting as if there were no loss of effective head

betwixt *c* and the weir. Take, now, Experiment No. 6, and the heads are as follows:—

	The head measured from still water at *c*, 33 ft. above crest	The head measured over crest at *c*, enlarged section 3 ft. above crest	The head measured at *d*, the upper vertical face of crest
Deduct heads due to resistance . .	$9\frac{7}{16} = 9{\cdot}437$ $\frac{3}{16} = {\cdot}187$	$8\frac{12}{16} = 8{\cdot}75$ ${\cdot}02$	$7\frac{9}{16} = 7{\cdot}563$ 00
Corrected heads . .	9·250	8·73	7·563

"The co-efficient due to the first of these heads is ·617, but the co-efficient for the head taken at only 3 ft. above the crest would amount to about ·674. If you deduct $\frac{3}{16}$ in. from each of the heads observed at *c*, and apply the co-efficient ·617, you will, under all the circumstances of this set of experiments, get the discharge very nearly, and find it at Table VI., p. 424, of my book for different heads. There are several interesting results to be deduced from your observations and the detailed ordinates, but I am prevented from drawing any other inference than that above, from want of time.

"Yours, my dear sir, very truly,

"JOHN NEVILLE.

"W. Anderson, Esq."

Column 12.—The lift was measured as the difference of level between the water in the mouth of the inlet culvert, and in the outlet at the engine-house wall, this being the useful lift. In fact, however, there would be a slight fall to the suction pipes of the pump; and in the pump-case, the water at the side furtherest from the outlet rose about six inches higher than at the gauge point in the culvert—the surface sloping down to it. The whirling motion communicated to the water by the fan expended itself partly in motion seaward, along the outlet channel, thereby reducing the head otherwise necessary to produce the current through it, and partly in heaping up the water, as described in the pump-case; one

source of loss, therefore, arises from the pump working practically under about six inches more head than the net difference of level, amounting to from 6 to 8 per cent. of the lift.

Column 14.—As already stated, the indicator diagrams were traced by a pair of Richards' indicators—the instruments, in fact, now on the table. The advantage they possess over the common kind is that the tracer can be lightly and accurately applied to the paper, no matter how rapid the vibrations. The metallic paper and sharp brass tracer used added also very much to the clearness of the figures. The four diagrams for each observation were traced in less than half a minute. Plate XII., Figs. 4 and 5, are reduced copies of two pairs.

Column 15.—The result of much labour and expense is now before the Institution. The mean of thirteen experiments, carefully and honestly made, gives 55·6 per cent. as the mean duty of the pumping engine; the greatest variation in the results being 7 per cent., and (the 1st and 12th experiments excepted), the greatest variation in the remainder is under 4 per cent. The speed of the pump was purposely varied to ascertain if any perceptible effect would be produced on the duty. One-sixth may fairly be allowed as the resistance of the pair of engines and the gearing, which would leave the pump doing 67 per cent. duty—a result highly creditable to the makers. The consumption of fuel could not be ascertained during the experiments on account of the numerous stoppages; but the average is 2½ cwt. of fair Scotch coal per hour; and, by careful management, the author has run the pump with a little over 2 cwt., or 4½ lb. per indicated horse-power per hour.

The cost of the pumping engine complete was £1,850—£37 per indicated horse-power. The buildings, culverts, foundations, came to £2,725 or £54 10s. per indicated horse-

power. The badness of the weather and the nature of the ground rendered the latter more expensive than was at all anticipated.

In conclusion, the author may remark that he has endeavoured to lay his experiments before the Institution in such form that any one interested in this matter may check the results obtained for himself—even as regards the indicator diagrams—which will be preserved among the papers of the Institution.

[14th January, 1863.]

M. B. MULLINS, Esq., Vice-President, in the Chair.

Irish Linen Bleaching and Bleaching Machinery.

By John Smyth, Jun., A.M., Member.

The bleaching of linen, for which Ireland is peculiarly and justly celebrated, is a widely different process from that of cotton. Before manufacture the former is naturally dark and the latter nearly white. This fact will account for the small progress made in the improvement of linen compared with cotton bleaching.

For some years back cotton pieces have been sewed together, in lengths of about six miles, and bleached in two or three days, without being separated or put out on the fields, thereby saving a great deal of manual labour; whereas the bleaching of linens still occupies about four weeks, although some classes are occasionally done in five or six days. In order to understand the bleaching of linen, it is necessary to become acquainted with the nature of the material itself, the colouring matter, and the various extraneous substances taken up in the manufacture.

Linen goods are manufactured from the fibre of the flax plant, the consideration of which would afford ample materials

for a separate paper. I shall therefore just give it a passing glance. It is composed of three parts, the shove or boon, the fibre, and the cement or gum, which joins the fibre and boon together. As the outside fibre or bark is the only useful part, it must be separated from the boon, and to do this it is necessary to decompose the gluten. This process changes the colour of the flax from a light yellowish grey to a dark brown, thus increasing the colouring matter to be removed.

To obviate this difficulty several new plans of steeping, as this process is called, have been invented, but as yet without having arrived at any satisfactory result; for, in whatever way the steeping is done, there is still a large quantity of organic colouring matter to be removed before the linen can be made white.

It has been found that this quantity is about 33 per cent. in linen, whilst in cotton it is only 5 per cent. Considerable time is required to effect this reduction of the fibre, as the bleaching must be accomplished rather by the slow and gradual effects of weak stuffs than by the sudden application of strong ones. The centre of the fibre must be reached in each application of the bleaching agent, otherwise the colour will be neither pure nor permanent, and the goods will be very subject to damage from difference in expansion. This accounts for the danger in bleaching fine goods in which, although the colouring matter is small, as they are manufactured from Belgian flax, yet the yarn is so dense and so closely put together as to render it exceedingly difficult of penetration by any liquid.

The organic colouring matter of the flax is slightly soluble in water and eminently so in alkalies; although soluble in the alkalies it is not easily removed without exposure to the air or the application of chlorine. Another substance to be removed is a resinous or gummy matter, probably a portion of the gum which unites the boon of the flax to the fibre. This

matter is removed by repeated boiling, as it is soluble in alkaline lyes.

So much for the raw material. I now proceed to describe the obstacles to be met in the bleaching of the manufactured linen, and the manner of overcoming them.

One of the greatest of these is the dressing put on the yarn by the weaver to make it smooth, and also cover over bad work.

The most usual and perhaps the least noxious is flour, which is made into a paste and applied to the yarn by means of a brush.

Potatoes prepared in a peculiar manner are sometimes used for this purpose; and, as they are allowed to sour before use, the operation of applying them to the yarn is anything but agreeable.

The worst dressing, however, for the bleacher that I have ever heard of is a mixture of glue, sago, and tallow, boiled together. The manufacturer likes it because it makes the web firm, tinny and more sightly. I have no doubt there are a great many other noxious ingredients used, could they only be detected.

Weavers houses are generally smoky, from bad ventilation and from their burning resin candles; so, when we consider that the yarn covered with wet dressing is often exposed for a long time to the smoke and dirt, some idea may be formed of the difficulty experienced in cleansing the threads which have been tightly driven together.

Besides the dressing, the weavers also use tallow to make the thread more slippery; as they generally apply it to the warp in a very partial manner, the goods are more liable to uneven bleach, for those parts of the web which are more impregnated with the tallow, are thereby rendered more impermeable to water or bleaching agents.

I have been thus particular in describing the dressing

process, as it is absolutely necessary to have all extraneous substances removed from the thread before the colouring matter is attacked.

DESCRIPTION.

Plate XIII. is a plan of Milltown Bleach-works, Banbridge, which will enable me to make the following description of the bleaching process more easily understood.

These works are capable of bleaching 120,000 pieces, of 30 yds. each, per annum. They are driven partly by steam and partly by water; the former is used very economically, as, after passing through the engine from a boiler at 50 lbs. pressure on the square inch, it is collected in another larger boiler at from 6 lb. to 8 lb. pressure, whence it goes to do its work in boiling and drying. This plan, without the intervention of a low-pressure boiler or reservoir, has been in use for some time in a few of the cotton bleach-works in Lancashire. I consider the reservoir, however, to be a great improvement, as it prevents puffing or intermittent boiling; indeed, since I introduced this plan, it has given me great satisfaction, and I have experienced none of those disadvantages complained of by other bleachers as belonging to this system.

A constant supply of water is kept up for the wheels by the Bann Reservoir Company, who levy a tax of £10 per annum per foot-fall on all the fall-holders of the upper Bann river, below the point where it is joined by the river Muddock, which acts as a supply feeder from the reservoir.

These works have a fall of 20 ft., in three divisions—one 8 ft., and two 6 ft. The two last are not shown in the plan, as they are further down the river, and merely drive beetling engines. Each of these falls is occupied by two water-wheels. The two on the first, which are shown in the plan, are breast wheels, constructed after the plan introduced by Mr. William Fairbairn, of Manchester, to the mills on the river Bann, about

twenty years ago; the other four are not at present of so good a construction.

These works are provided with a complete system of railways and turn-tables, used to convey the goods from one process to another. I have prepared the following table of the usual plan of bleaching pursued in these works, to which I also will have occasion to refer:—

BLEACHING PROCESS.

1. Steep and wash.
2. Boil and wash.
3. Boil, wash, and field.
4. Do. do.
5. Boil and wash.
6. Dip and wash.
7. Sour and wash.
8. Rub.
9. Scald and wash.
10. 6, 7, 8, 9 and field.
11. 6, 7, 8, wash and finish.

PREPARATION.

The brown linen goods are brought from the manufacturer to the Brown Room A (Plate XIII.), where they are measured and sorted into parcels; these parcels are made of such a size as to fill the pots and kieves; they contain, on the average, 300 pieces of 30 yds. each. Each piece is then marked at the ends with descriptive figures and letters in red thread, died so as to be unaffected by the several bleaching processes. The parcel is next thrown out on the rack B, and each piece is well opened out of the fold, and made up in loose links about a yard in length, and held together by a band formed by the one end of the web, which is loosely knotted around the links; this is called linking. They are now ready for the first process.

STEEPING.

1. The object of this process is to remove the dressing; and

it is effected in a large wooden, iron, or brick-and-cement kieve or vessel (see C on plan). The kieve is about half filled with water, heated up to 120° to 150° F., into which the parcel is immersed, and well put down by men, who push the pieces with poles, as they are thrown in. The goods are prevented from rising out of the vessel when fermentation sets in, by wooden or iron bars, or rather both combined, which require to be firmly fixed to the sides of the vessel, as the parcel swells up with great force during the process.

The fermentation, which is produced by the action of the warm water on the dressing, is allowed to continue from one to two days; in Summer it is often found unnecessary to heat the water.

Various substances are used with the water to promote fermentation, such as pipe-clay, resin, or resin-soap, bran, and, in some cases, the old spent lyes in which other goods, at more advanced stages, have been boiled. The substance used and the manner of proceeding is more or less regulated by the nature of the dressing, and the closeness of texture in the goods. If much tallow be present, it is better to steep or boil, first, in a milk of lime, which forms a calcareous soap with the tallow or fat. The acetic acid generated in the process of fermentation is said to enter into combination with the fatty matters, and form an insoluble compound, which is unaffected by the after-boiling in alkaline lyes, and the goods are thereby spotted. Care must be taken not to allow the goods to remain too long in the steep, as they may pass from the acetous to the putrid stage of fermentation, and thereby be damaged. When the goods have been sufficiently long in the steep, the liquid is run off, and they are thrown out to be washed.

WASH-MILLS—(Plate XIV., Fig. 1).

The machines generally used in this country for washing

are called wash-mill feet or stocks; they are awkward looking, yet possess many peculiar advantages. Two large blocks of wood (Plate XIV., D), weighing about 534 lb. each, are suspended from a strong framing (B) above them, by a shank (C); an axis (A) is passed through the shank, and works in a pedestal on the top of the framing; the heel-clout (E) projects downwards from the back part of the foot, and is caught by the wiper (F) as the shaft (L) revolves.

The box (G), which contains two feet, acting alternately, is curved at M to allow the goods to turn freely and expose every part to the action of the mill.

When the foot (D) is released from the hook (J) the facing (O) of the revolving wiper (F) catches the heel-clout (E), and draws back the foot (D) to a certain position, whence it falls, by its own weight, against the goods at G, and squeezes them against the opposite side of the box, freeing them, at the same time, of the water admitted by the cock (H); the water, in running off through the holes (N), carries away the severed impurities. The foot is again raised, and, before it has time to fall, the goods are re-soaked with fresh water, which is driven out by the falling foot.

This alternate soaking and squeezing occurs thirty times per minute. When the washing is concluded the water-cock (H) is stopped, the hook (J) let fall upon a projection (K), and, by means of the lever (I), the workman pulls the foot out of reach of the wiper (F). The goods are then thrown out and their folds re-arranged for the next process.

DASH-WHEEL—(Plate XIV., Fig. 2).

The dash-wheel is a cylindrical box, revolving upon its axis (A), and divided into four compartments; these have openings (B) into which two or more pieces are introduced; water is admitted through the hollow axis (A), and the wheel is set in motion, causing the goods to toss from side to side.

Numerous other washing machines have been lately brought out, which have been found suitable merely for a few purposes, and not at all likely to supersede the wash-mill feet. A great desideratum is a machine, capable of washing a number of pieces sewed together, which would remove one great obstacle to the introduction of the endless system in linen bleaching. Cotton is much more easily washed than linen, and is almost universally bleached by the endless system.

BOILING—(Plate XV., Fig 1).

2. After the goods have been washed from the steep, and properly linked again on the rack (B, Plate XIII.), they are taken to the furnace or pot (E on plan) and boiled, about four hours, in soda lye that has been already used for several boils, and to which additional soda is seldom added.

The pot is a cylindrical cast or malleable iron vessel, consisting generally of two parts, the crib (D) and the bottom (E), which are fastened together by a flange joint (G). It has a malleable iron lid (F), containing a safety-valve, by which the proper boiling pressure can be regulated. The steam-pipe (P) is introduced through the bottom of the pot, and passes into a circular pipe containing a number of small holes, which serve to diffuse the steam more regularly through the boil. A false perforated bottom (B), a little above the steam-pipe, protects the goods from the injurious effects of the hot pipe and the blowing of the steam, which would have the effect of riddling them.

Some pots are provided with a spout-pipe (A), which is bolted to the centre of the false bottom, and rises to within a few inches of the lid, where it is surmounted by a cap (C), called an umbrella. The liquid is forced against the umbrella by the pressure of the steam from below, and distributed evenly over the goods, whereby they get the full benefit of the lye, which is kept in constant circulation.

The goods are laid regularly, and not too closely, in the furnace, so as to admit of the easy percolation of the lye through every part. They are prevented from rising against the lid, and being burnt, by covering boards, across which two iron bars, fixed at both ends, are stretched.

Various bleachers, in boiling, use various pressures on the safety-valves in the lids of their furnaces; these pressures generally range from 4 lbs. to 10 lbs. per square inch—the higher the pressure the greater is the saving in coals. It is, however, considered more dangerous to the strength of the goods to boil at high pressures; although cotton and even linen yarn bleachers are boiling so high as 50 lbs. pressure with perfect safety. Very strong furnaces are, of course, required for such boiling, and very small apertures for introducing the goods.

PREPARATION OF LYE.

Lye is prepared from carbonate of soda or soda ash. Some bleachers use the ash without adding any lime to make it caustic—others make it quite caustic; but the most general plan is to make it partly caustic, by driving off part of its carbonic acid. The first plan is not effective enough, and the second is too much so, and is likely to injure the fibre of fine goods. Regard, in this matter, must be had to the quality of the goods and purity of the ash.

In testing the purity of the ash, the available soda is determined by means of the alkalimeter—a vessel graduated to 100°—from which a quantity of an acid of known strength is poured upon a solution of a known weight of the ash, till it is neutralized. The point of neutralization is easily known, after some practice, by a solution of litmus, or by the use of litmus paper.

The carbonate of soda of commerce always contains a certain amount of caustic soda. To ascertain this, first determine, by the alkalimeter, the amount of soda; then, by the carbonic acid

apparatus, how much carbonic acid it contains; these two quantities being known, a very easy calculation will give the amount of caustic soda. This experiment requires a very good balance and air-pump, and a great deal of care, to be at all correct. There are a great many other impurities found in the ash—such as common salt, sulphate, sulphuret, and hyposulphite of soda. The quantitative determination of these, however, requires better laboratories, and more chemical knowledge, than are generally possessed by the bleacher; so that it is seldom practised.

In preparing the lye for the pot it is usual to have three vessels (H, I, and F., Plate XIII.). In the first (H) the soda ash is dissolved, and allowed to settle; the clear liquid is then drawn off into the second vessel (I), to which, after slacking, the lime is added. When it has settled here it is drawn off into the third vessel, from which, by the use of a gauge, any determined quantity may be added to the pot.

We now return to the goods, which, as we have already seen, were steeped, washed, and laid in the pot, surrounded by nearly spent lye. When the boiling is finished, the lid of the pot is lifted by a small windlass fastened to the wall, and the covering boards and stays removed. A jib-crane (K, on Plate XIII.) is then swung round, so as to suspend over the pot an iron cross-head attached to a pulley-block. The cross-head has four, and sometimes six, arms, with hooks on their extremities, to which the loops of a strong rope netting, that had been put in the pot before the goods, are attached. The netting containing the goods is lifted up, clear of the pot, by the windlass, which is worked either by men or a donkey-engine, and lowered into the floor of the boiling-house, or into the coolers, whence the goods are conveyed on trucks to the wash-mills.

SECOND BOIL.

3. After being well washed, the goods are re-linked on the

racks, and again put into the pot, into a much cleaner lye than had been used in the previous boil, although not perfectly fresh, as it is renewed, after having been used in a more advanced stage of the bleaching, with some fresh solution of soda out of the receiver (F, Plate XIII.). Its strength is ascertained by Twaddle's hydrometer, and allowance made for the impurities and spent soda derived from previous boilings in the same liquid.

The goods are boiled this time about five or six hours; then removed from the furnace, as described before, and very well washed; they are now ready for the field. It is most important, especially in Summer, that the washing, previous to exposure on the grass, be done well; for if any lye be left in the thread it will be condensed by exposure, so as to injure the fabric. To test the goods as to whether they are washed or not, take some litmus paper that has been slightly reddened by a weak acid, and tighten it up in the folds of one of the pieces; it will turn blue if the washing has not been properly done, and will be unaffected if the contrary is the case. The goods are spread on the grass for three or four days; they are kept at width by means of little pegs twisted into their selvidges and extremities, and stuck firmly in the ground.

THIRD BOIL.

4. When the goods have been exposed for a sufficiently long time, they are again boiled in the furnace for the same time as the last, and at about the same strength, when they are again exposed on the grass.

This process is repeated until they are considered fit to be retained in the house, and subjected to the chlorine treatment.

Some kinds of linen require to be only twice or thrice boiled, and exposed on the grass in Summer, and three or four times in Winter, whilst others require more. Some soft open kinds

of goods, such as diapers or drills, are only exposed once, and indeed, in some cases, not at all.

The goods are now carefully examined, and the pieces that seem to be ready for the chlorine are kept in the house, whilst the others are boiled, and again sent out to the field. When the rejected pieces come in again they are in much the same state as the others.

At this stage some bleachers give the goods what is called a rough sour. This consists in immersing them in a vessel (L, on Plate XIII.) containing dilute sulphuric acid, which stands at about 2° or 3° on the hydrometer, for the space of about twelve hours. The best form of vessel for this purpose is a cylinder, with a slight taper from bottom to top, so as to prevent the goods from rising above the surface of the liquid.

FOURTH BOIL.

5. The next process is to boil the goods in a lye, from $2\frac{1}{2}°$ to $3\frac{1}{2}°$ T., for five hours, if they have not been previously soured; but, if they have, only for three hours, with a rather weaker lye, containing some soap.

They are now washed, made up in fresh folds, and immersed in the chlorine bleaching liquid.

PREPARATION OF BLEACHING LIQUID.

There are two kinds of this liquid: in the one the chlorine is combined with a solution of lime, in the other with a solution of soda. As the first parts with its chlorine very quickly, it is generally used for coarse light goods whose fibres are easily penetrated. The second gives off its chlorine slowly, and is used for fine heavy goods whose fibres are difficult of penetration, and therefore require time.

The first is made either by dissolving the commercial bleaching powder in water, or by subjecting a solution of lime-water to chlorine gas for sufficient time. The chlorine is

generated by mixing, in a leaden chamber (M, on Plan), black oxide of manganese and common salt, in certain proportions. Sulphuric acid is poured into this mixture, and heat applied by means of a steam chamber surrounding the cistern. Whilst the chlorine is passing into the receiver (N, on Plate XIII.) the lime-water must be kept well agitated.

The second liquid is made in the same manner as the first, by substituting a solution of soda.

These liquids are sold in carboys, which can conveniently be taken to the edge of the kieves and poured in until the strength is as required for the goods about to be immersed.

The tests generally used to determine the strength of chlorine baths are, solutions of red cabbage and indigo dissolved in sulphuric acid. The number of measures of bleaching liquid requisite to destroy the colour of either of these solutions gives at once the strength. To determine the strength of the bleaching powder and the liquid, as it comes from the manufacturer, several methods are employed. A very good one is to try how much of the sample is required to peroxidise a certain quantity of the protosulphate of iron.

THE DIP.

6. The goods, according to their requirements, are allowed to remain in the chlorine liquid from five to twelve hours. The kieves (O, Plate XIII.) used in this process are made either of large slabs of stone or brick-work, lined with cement. The proper temperature of the liquid at the time of immersion is about 60° F.; for this purpose steam is used in Winter.

The goods are thrown loosely into the kieve, piece by piece, so as to allow the chlorine liquor to get evenly to every part, and are drawn out in the same way that the air may strike them equally. They are generally washed after this process, as it is much safer to do so; although in some cases, when they are very coarse, it is omitted, and a much greater effect is

produced, as when they come in contact with the acid in the following process, there is a great disengagement of chlorine gas, which acts very quickly and would destroy fine fabrics.

THE SOUR.

7. The next process, souring, has already been described above, when speaking of the rough sour. It occupies from four to eight hours, and the goods are drawn out of it by hooked sticks, which catch on the bands of the pieces. They are allowed to drain for some time over the kieve, and then washed most carefully, as any trace of acid left in the fibre, and coming afterwards into contact with the alkali in the pot, would be most injurious.

THE RUB.

8. The object of this process, called "rubbing," is to give the goods a thorough soaping to neutralize any injurious acids or alkalies they may contain.

It was formerly executed, in a very slow manner, by hand; now, however, a very useful machine, called rubbing boards, effects the same purpose (P, Plate XIII.). At the foot of this machine (Plate XVI.) there is a trough (A) containing a strong solution of soap, kept constantly boiling by a copper steam-pipe (B) which passes through it.

The goods are first passed through this trough, then between two square flat pieces (C and C′) of lignum vitæ or marble, toothed transversely. The upper card (C) is made to traverse over the goods (D) as they are pulled through by the drawing engine (E).

THE SCALD.

9. The scald is a short boil, of from two to three hours, in perfectly clean made-up lye, which contains a quantity of soap, besides what is left in the goods after rubbing.

As the pot is made up with fresh clean water, and pure lye, the specific gravity of the scald is much less than that of any of the succeeding boils, which contain colouring matter and inoperative soda.

SECOND TURN.

10. After being again washed the goods are dipped, washed, soured—if necessary rubbed and scalded again; after which they are washed and put out on the field for two days.

THIRD TURN.

11. They are now dipped again, but with weaker liquor, as they are more easily affected coming from the field—washed, soured, washed in spring water, and rubbed again.

The goods are now carefully looked over, and the white pieces put aside for finishing, whilst the others are again scalded, washed, dipped, washed, soured, washed and rubbed, or, as it is called, get a turn. These are again examined, and if any amongst them are not white enough, they are put to the field for a day or so; brought in again to get another turn, and examined as before. Some goods require more turns than others, and all kinds in Winter require a great deal more than in Summer. The bleaching process is now finished, and the finishing for the market, which is not the least important part, is commenced.

FINISHING.

The goods are now carefully washed (R′, on Plate XIII.) twice in spring water. A large quantity of pure water is required for this purpose; and, as it is almost impossible to get springs enough, recourse is had to filter ponds (T, on Plan). They are next brought into the starching house, where they are first pulled out to their width, then sewed together at the ends and passed through the water-mangle (V, Plate XIII.)

This machine (Fig. 2, Plate XV.) has three or more bowls (A), generally of wood, but in some cases the middle one is brass. Pressure is thrown on the axles of these bowls by means of levers (L) and weights (W). Under the bowls a box (B) is fixed, into which there is a continued flow of spring water. The goods, after passing through the water, are squeezed by the bowls, so as to have an equal quantity of water diffused through them, and wound up on a movable roller (C), at the back of the machine. When this roller has received four or five pieces it is then removed to the starching mangle (X, on Plate XIII).

This mangle has four or more bowls, generally of wood, but sometimes made of rags or other suitable material. The starch, after having been well boiled in a vat, and coloured blue, either with smalts or ultramarine, is put in the box (B, plate XV., Fig. 2). The pieces (D), in passing through this machine, are kept into their proper width by a spreader (E), which is not of so simple a construction as that used in the water-mangle. It is a wooden roller, from the centre of which copper, in wire or thin slips, is spirally wound in opposite directions, thus forming right and left-handed screws. The roller revolves in a contrary direction to that of the pieces, and screws off the tucks or creases in the piece from the centre to the selvidges.

The goods on the roller or batch (C) are hoisted up to the drying loft, where they are either passed over the drying machine, or hung up by the selvidges on bent wire pins, and dried by the air, which passes freely through louvre windows. The drying machine has a number of tinned sheet iron cylinders, through the axis of which steam is admitted. The goods are passed over these hot cylinders, deprived of all their moisture, except what is required for beetling, cooled by a fan making 1,000 revolutions per minute, and folded in a convenient form for carrying to the beetles at the end of the machine. In some places the water-mangle, starching machine,

and drying machine are all coupled together, and their respective speeds made to suit one another by frictional gearing. This plan saves labour; it has, however, a tendency to narrow the goods, which then require to be passed through the widening machine. This machine has two large pulleys or drums, set drunk, or at an angle to their shaft; two belts, by means of small pulleys and shafts, are made to grip tightly the half circumference of these large drums, which they keep constantly revolving. The goods are entered at the narrow side of the machine, where the drums make an acute angle with the shaft, and delivered at the wide or obtuse angle side; and, as the belts hold the pieces tightly against the drums, they must widen them.

Some drying lofts have ranges of steam-pipes to heat the air, as the atmosphere has sometimes no drying power at all.

Those goods which have been dried on the pins in a drying loft are next passed through the damping machine. This machine has a revolving brush, which dips into a box of spring water, and sprinkles the piece as it is drawn rapidly over. The pieces are then piled up in a box for eight or twelve hours, until the damp is evenly distributed through them.

All goods are then (in whatever manner dried and damped) stretched, drawn up at their width, and straightened at the selvidges, by slapping against a wooden horse, to make them ready for the beetling engines (Y, Plate XIII).

BEETLING ENGINE—(Plate XVII).

The beetling engine (Fig. 1, Plate XVII.*) as its name

* This figure shows the beetling engine at rest. When it is in motion so many beetles are never down on the beam at one time, as the beetle rebounds after falling on the goods, and the machine is working well when the wiper catches the beetle immediately after the first rebound. The wiper beams makes 30 revolutions per minute; and, as there are two rows of wipers on the beam, each beetle falls once per second.

signifies, is a machine having a number of beetles (H), about 5 ft. long and 4 in. thick. These beetles are raised and let fall by the wipers (K), bolted in a spiral to the beam (B); for, as the beam revolves, the wipers catch on shafts (L) projecting from the beetles. The goods are rolled upon the beam (A), which holds nine pieces, in three breadths of three pieces each. This beam is kept slowly revolving by the wheel (C), and at the same time has a slight longitudinal motion from the eccentric (D), and thus gives every part of the piece its share of beetling. The pieces, after being beetled from eight to sixty hours, according to the finish required, are hung up in the drying loft for a short time, or, as it is technically called, "are aired;" this is sometimes done by the drying machine. They are then carefully examined, and subjected to the beetles again for a short time, till they are brought to the required finish. Some goods, instead of getting this second beetling, are put through the calender; some are put through it between the two beetlings, and some are finished almost entirely by it. This is regulated by the kind and quality of goods, and the market they are intended for.

The calender somewhat resembles the water and starching mangle; its frame is, however, much stronger, and some of its bowls are made of paper, and some of cast iron; these bowls are subjected to an immense pressure of from 16 to 60 tons, by means of levers and weights. The goods are passed through so as to receive two or more squeezes, and received on a movable roller at the back of the machine.

Besides these, there are other finishing machines not so generally used. The goods are now put up in a convenient form, and sent to the warehouse, where they are lapped and ornamented to suit the taste of every country.

THEORIES OF BLEACHING.

To render the bleachers occupation more scientific and

certain a true knowledge of the nature of the colouring matter, as well as of the changes effected in it during the progress of the bleaching, would be most desirable. Hitherto, however, very little light has been thrown on this subject, and there is a great difference of opinion about the action of the chlorine bleaching salt.

Bleaching powder has generally been considered to be a combination of chloride of calcium and hypochlorite of lime (Ca Cl+CaO Cl O), and colours a regular combination of hydrogen, carbon, and oxygen.

When the solution of the powder is brought into contact with the goods, the Cl seizes the H of the colouring matter, to form H Cl, and the CaO enters into combination, either with the H Cl or some mineral acid, or the Cl may decompose HO by taking H, thus allowing the O to be liberated, and by its union with one of the elements, or the whole collectively, effect the object in view. This was Berthollet's view; he, therefore considered the presence of HO necessary.

When the goods, saturated with the bleaching liquid, are brought into contact with the So_3, in souring, a still more rapid evolution of Cl is the result, as the So_3 forms two atoms of 2 CaO So_3, and two of Cl (CaCl+CaO ClO+ So_3)=(2 CaO So_3+2 Cl).

Dr. Muspratt, of Liverpool, in his *Chemistry of the Arts*, prefers calling bleaching powder oxychloride of calcium, thus Ca $\left\{\begin{matrix}O\\Cl\end{matrix}\right.$ this, however, follows if we double the equivalent of the hypochlorite thus, Ca Cl+CaOClO=2 CaO Cl. He also says that it exerts a feeble influence on the colouring matter, unless reacted upon by some other body; that even exposure to the air will be sufficient to disengage Cl, as the Co_2 of the air forms with the Ca and O of the compound CaO CO_2, but that So_3 or H Cl decomposes it more rapidly and effectively thus, Ca $\left\{\begin{matrix}O\\Cl+HO\end{matrix}\right.$ So_3=CaO So_2 +HO+Cl.

In both cases Cl is disengaged in equal quantities, and whether it seizes the H of the colouring matter, or of the HO, O is set free, and, therefore, plays a very important part in the bleaching.

FIELD WORK.

There are various theories to explain the effect of exposure to the air on the field.

1st. That the colouring matter unites with the oxygen of the air and forms a soluble compound, which can be dissolved out by water or alkaline liquors in boiling, or the oxygen may enter into combination with the carbon or hydrogen of the colouring matter; in the first case yielding carbonic acid, which escapes, and, in the second, forming water—leaving the remaining portion of the substance either colourless or so constituted that it is soluble in water.

2nd. That oxygen combines directly with the colouring matter, forming a permanent colourless substance.

3rd. That the bleaching is not so much due to the effects of the atmosphere as to water, inasmuch as one of the elements of this fluid combines with the colouring matter, producing the reactions alluded to in the first explanation. It is said, in support of this last theory, that dew, in consequence of its purity, is more favourable to bleaching, which is accelerated in those seasons of the year in which there is a heavier fall of mist. The sun's light is composed of chemical particles which have great influence on various compounds, and are, no doubt, highly conducive to bleaching.

The discovery of ozone is very likely to throw new light on this subject. I have often thought that when the goods coming from the field have a smell like that of ozone that the bleaching is more easily accomplished; and, as its effects are rendered apparent by moisture, the goods on the field, after a shower of rain, seem to have undergone a great change.

Some years ago, Dr. Andrews, of Belfast, made some very important investigations on the subject of ozone generally; and I collected for him, from the statistics of six years bleaching in the Milltown Bleach-works, Banbridge, tables to show what season of each year was most favourable, and how some years were more favourable than others. A summary of these tables will be found below, from which it will be seen that July was the best month of the year; but whether that was owing to the heat and light being greater at that time, or to an excess of ozone, it would be difficult to determine, especially as Dr. Andrews did not then take up that branch of the subject.

AVERAGE OF TIME AND WORK REQUIRED IN BLEACHING FOR EACH MONTH FROM 1852 TO 1858

Months	Turns before Dip	Turns after Dip	Total Turns	No. of days in process
January	4·33	4·27	8 60	62·7
February	4·29	4·01	8·30	58·25
March	4·03	3·68	7·71	53·42
April	3·66	3·70	7·36	49·75
May	3·68	3·64	7·32	46·33
June	3·74	3·60	7·34	43·00
July	3·70	3·48	7·18	41·00
August	3 83	3·39	7·22	47·00
September	4·10	3·87	7·97	46·29
October	4·35	4·19	8·54	48·83
November	4·48	4·74	9·22	56·41
December	6·89	4·45	11·34	61·25

I am at present taking daily meteorological observations for the British Meteorological Society, in order to throw some light on this interesting subject. I am afraid, however, I will have some difficulty in arriving at an exact conclusion, as ozone test-papers are at present in such an unsatisfactory state.

It is very much to be desired that a series of proper experiments on the theory of bleaching could be made by scientific men, who have both the opportunities and qualifications

necessary for such a work. If some substitute could be discovered for the tedious and expensive process of exposing the goods on the grass it would confer a great benefit on the Irish linen trade.

[February 11th, 1863.]

PROFESSOR DOWNING, LL.D., Vice-President, in the Chair.

On the INFLUENCE *of the* INERTIA *of the* RECIPROCATING PARTS *of* STEAM ENGINES, *and its* EFFECTS *in* CONNEXION *with the* EXPANSIVE ACTION *of* STEAM.—By GEORGE H. STRYPE, Esq., Member.

AT the present day the value of using the expansive action of steam in the steam-engine is so well understood and appreciated, in respect to its superior economy of fuel, that it is quite superfluous to say a single word in its favour on that head. There still, however, exists a wide-spread feeling among mill owners and some engineers that it is not well adapted for driving machinery when regularity of motion is an important object, unless some especial arrangement is made use of to counteract the great difference between the initial and final pressure of steam in the cylinder. It is argued "that if we use expansion with an engine having a single cylinder, we admit steam of a higher pressure than suffices to balance the resistance to be overcome, and consequently the velocity will be increased; we then cut off the steam, and its pressure by expansion will gradually become less than the resistance, and the velocity will diminish. A fluctuation in the motion of the engine will thus be produced, unless some means be adopted to equalize this disparity of pressure."

With this object in view, a great amount of ingenuity has been displayed in contriving different forms of double-cylinder engines, in which the lessening pressure is transferred from

one cylinder to the other in such a way that the variation of one shall balance, as far as possible, that of the other.

The engine thus becomes much more complicated and expensive—and unnecessarily so, if it can be shown that this supposed irregular action on the crank is overrated in the case of a single-cylinder engine.

The purpose of the present paper is to demonstrate that the inertia of the working beam and other reciprocating parts of the engine becomes a regulating medium such as is required; and although, when a considerable amount of expansion is used, there is undoubtedly a great difference of pressure on the piston between the first and last of the stroke, the power in its transference is so modified that the variation of pressure on the crank is nearly equalized, and in some instances even reversed in its character.

If we imagine an engine beam detached from the crank and ready to start in motion from its position at the end of the stroke, it will require a certain amount of force applied to it to generate the velocity it acquires when the engine is at its ordinary work; and, as this velocity is an accelerated one during the first half of the stroke, the force must act continuously during this period. When the beam has arrived at the horizontal position with the attained velocity, it will require a certain amount of continuous force applied to it to arrest its motion, and bring it to a state of rest when it reaches its position at the other extremity of its stroke. These two forces, in the case assumed, are exactly equal to each other. If we now conceive the beam connected to the crank and the engine performing its ordinary duty, the same effects will occur: the accelerating force will be abstracted from the force communicated by the piston, and will be stored in the beam and its connexions during the first half of the stroke, to be given out again to the crank while the velocity is retarding during the latter half of the stroke. It is scarcely requisite

to remark that similar effects will be repeated in the return or up stroke of the engine.

It may at first sight be supposed that this accelerating and retarding force is insignificant compared with the pressure acting on the piston; but it will be found on examination that it is not so, and that, in fact, it is sufficiently great to produce an important modification in the nature of the force acting on the crank.

In estimating the amount of this force, the first and most obvious method would be to apply the simple law of falling bodies, the formula for which purpose is

$$f = \frac{w\,s}{16\,t^2}$$

w being the weight put in motion; s the space moved through in feet; t the time in seconds; and f the acquired force in the same terms as w.

It may perhaps place the subject in a stronger light to apply the formula to a specific example, instead of seeking at the present for a general analysis; and we may take the case of an engine of 40-horse power, being that in connexion with which the author's attention was, some years since, first directed to the subject. This engine had a cylinder of $35\frac{1}{2}$ in. diameter, 6 ft. length of stroke, made 30 revolutions per minute, and the weight of the reciprocating parts, when reduced to an equivalent placed at the end of the beam, was 8,214 lb.

If we take $s = 3$ ft. = half the length of stroke, then t will be $\frac{1}{120}$ of a minute, or half a second, and

$$f = \frac{w\,s}{16\,t^2} = \frac{8214 \times 3}{16 \times \frac{1}{4}} = 6{,}160 \text{ lb.}$$

Again, if the first quarter of the stroke is taken for s, equal $1\frac{1}{2}$ ft., then since the crank will pass in the same time through 60°, or $\frac{1}{6}$th of the circle, t will be equal to $\frac{1}{180}$th of a minute, or one-third of a second, and

$$f = \frac{w\,s}{16\,t^2} = \frac{8214 \times 1\frac{1}{2}}{16 \times \frac{1}{9}} = 6{,}930 \text{ lb.}$$

The want of coincidence in these two amounts proves that some error has been committed in our preliminary assumptions; and, on closer examination, it will be found that the discrepancy arises from our assuming the force to be uniform. With a uniform accelerating force the space passed through by the piston would vary as the square of the time; and from the nature of the circle it follows that this nearly holds good for a short period at the commencement of the stroke; but as the crank proceeds on its journey this law is widely departed from. It therefore becomes necessary to determine from the elements of the acceleration, the law of variation of the force producing it.

In proceeding to discover this law we will assume that the velocity of the crank is perfectly uniform, and that the space passed through by the piston is throughout the stroke exactly equal to the versed sine of the arc traversed by the crank. Neither of these assumptions is strictly correct; in the first instance from the periodic fluctuations in speed of the fly-wheel, and in the second consequent upon the changing angle of the connecting-rod. The magnitude of the first deviation depends upon the efficiency of the fly-wheel, and the second is governed by the ratio of the length of the connecting-rod compared with that of the crank; and as both these deviations are comparatively small in their effect, they may with propriety be neglected, especially as their consideration would add greatly to the intricacy of the question, and distract the attention from the principal object.

In Plate XVIII., Fig. 1, the diagram D A E represents a portion of the circle traversed by the crank-pin:—

A C $= r =$ radius of the crank in feet;

D B $= s =$ variable space moved through by the piston in feet;

B C $= x = r - s =$ cosine of the arc D A;

B A $= y =$ sine of the same arc;

V = velocity of the crank-pin in feet per second;
v = velocity of the piston in feet per second;
w = weight of the piston, beam, &c., in pounds; and,
f = the required force in pounds to produce the acceleration.

Let the crank-pin move through the elementary space A E, then simultaneously the piston will move through a space equal to A F, and by the similar triangles A E F and A C B.

$$AE : AF :: AC : AB.$$

These spaces being considered elementary, the respective velocities of the crank and piston in passing through them will be proportional to the spaces themselves, and therefore

$$V : v :: r : y$$

$$\text{or } v = \frac{Vy}{r}$$

but by the equation for the sine,

$$y = (2rs - s^2)^{\frac{1}{2}}$$

hence, $$v = \frac{V}{r} \times (2rs - s^2)^{\frac{1}{2}} \qquad \text{A}$$

Squaring both sides, $$v^2 = \frac{V^2}{r^2} \times (2rs - s^2)$$

and differentiating, $$v \cdot dv = \frac{V^2}{r^2} \times (r - s)ds \qquad \text{B}$$

But the general differential equation for variable forces is

$$v \cdot dv = \frac{32\,f}{w} ds,$$

and substituting this value in equation B

$$\frac{32\,f}{w} ds = \frac{V^2}{r^2} \times (r - s)ds.$$

Dividing both sides of this expression by ds, and transposing

$$f = \frac{V^2 w}{32\,r^2} \times (r - s) \qquad \text{C}$$

The factor $r - s$ in this last equation represents the distance C B$=x$, and shows that the force varies directly as the distance of the piston from the middle of its stroke; and thus

we find our inquiry has resolved itself into the converse of the familiar problem in dynamics, in which "it is required to determine the circumstances of velocity, time, and space, with relation to a body moving from quiescence, in consequence of an attraction which varies directly as the distance from the centre of force," the resolution of which is, that "D B being any given distance described by the body, the time of descent will vary directly as the arc D A."

Returning to equation C, it may be put into a more convenient form for practical application, observing that V, the velocity of the crank-pin, is compounded of the number of revolutions per second and the circumference of the circle described. Hence, if n equals the number of revolutions per minute,

$$V = \frac{3{\cdot}1416 \times 2r \times n}{60}.$$

Substituting the square of this value in place of V^2, and reducing, we finally obtain

$$f = {\cdot}00034 n^2 wx \qquad \text{D.}$$

It is now necessary to investigate the effect of the inertia of the connecting-rod in its lateral vibration.

This movement is at its maximum velocity when the crank is passing the centre, and, as it is losing motion during the time the velocity of the piston is becoming accelerated, its momentum will have an effect like in nature but antagonistic to that of the beam, &c. To ascertain the pressure on the crank-pin produced by it, the conditions being similar to those we have been investigating, except the direction of motion, we must substitute y and w' for x and w in equation D, w' being the weight of the connecting-rod reduced to its equivalent on the crank-pin.

$$f' = {\cdot}00034{\cdot}n^2 w' y \qquad \text{E}$$

As this pressure acts at right angles to that of the other vibrating parts, to obtain its effect, as opposed to the latter, it

must be multiplied by the cosine x, and divided by the sine y, or

$$f' = \cdot 00034 n^2 w' y \frac{x}{y} = \cdot 00034 n^2 w' x.$$

Having thus arrived at an expression exactly similar to equation D, the whole effect of the lateral momentum of the connecting-rod will be eliminated by deducting the value of w' from that of w in equation D.

The amount of this reduction, supposing the connecting-rod to be of uniform thickness from end to end, would be exactly one-third of the weight of the rod, since the centre of gyration of a parallel bar is ·5775 of its length from the centre of motion, and its effect from leverage would at the end of the bar be as the square of this number. The form of the connecting-rod being larger in the middle of its length would probably make the result somewhat less than this, but practically we may assume it to be simply one-third.

The same reasoning will also apply in calculating the equivalent effect of the weight of the working beam.

To ascertain, therefore, the value of w in equation D we must add together the weight of the piston, piston-rod, and its connexions, one-third the weight of the beam, and two-thirds that of the connecting-rod.

Throughout the foregoing investigation, when speaking of the "pressure on the crank-pin," this expression must not be confounded with the force of rotation acting on the crank shaft; this, of course, varies with the varying leverage of the crank, which equals y in the geometrical diagram. This leverage affects all engines alike, without reference to their peculiar construction, and, therefore, our investigation is quite independent of it.

Applying formula D to the example previously referred to, the results obtained are as given in the following table, in which the first column contains the successive equal tenths of

the stroke, and at these points are given, in the second column, the *minus* and *plus* forces calculated by the formula. In the third column are the pressures on the piston, as obtained by actual experiment with the indicator; and in the fourth are the sums of the second and third columns, or, in other words, the real working pressures on the crank:—

TABLE I., FIG. 2.

Proportional parts of the stroke	Value of f by formula	Pressure on the piston	Pressure on the crank
	lb.	lb.	lb.
·0	−7,600	14,464	6,864
·1	−6,080	14,464	8,384
·2	−4,560	13,860	9,300
·3	−3,040	13,266	10,226
·4	−1,520	12,672	11,152
·5	0	12,177	12,177
·6	+1,520	11,583	13,103
·7	+3,040	11,187	14,227
·8	+4,560	10,890	15,450
·9	+6,080	9,603	15,683

It is worthy of remark that the value of f, by the formula for uniform force, and calculated for the first quarter of the stroke, is approximately like the mean of the two first numbers in the second column of the preceding table; the former we found was 6,930 lb., and the latter is 6,840 lb. The last column exhibits strikingly the modifying influence of the inertia of the moving weights, for while the pressure of steam on the piston is gradually diminishing throughout the stroke, the force on the crank is increasing, till at the end it is more than twice as great as at the commencement of the stroke.

The inference is therefore unavoidable that the employment of expansion would have had a beneficial effect in equalizing the motive power.

Accordingly a considerable amount of lap was added to the steam side of the valves to cut off the steam earlier, and the results obtained are recorded in the following table:—

TABLE II., FIG. 3.

Proportional parts of the stroke	Value of f by formula	Pressure on the piston	Pressure on the crank
	lb.	lb.	lb.
·0	−7,600	20,295	12,695
·1	−6,080	20,000	13,920
·2	−4,560	18,414	13,954
·3	−3,040	17,226	14,186
·4	−1,520	16,434	14,914
·5	0	15,048	15,048
·6	+1,520	13,068	14,588
·7	+3,040	11,088	14,128
·8	+4,560	9,603	14,163
·9	+6,080	8,415	14,495

The last column now shows a much more equal pressure, although still in excess in the last half of the stroke, proving that expansion might, with advantage, have been carried to a greater length had the construction of the valve permitted it. Previously to the alteration described this engine worked exceedingly rough and unsteady; but by simply giving a greater degree of expansion there was a most decided improvement as regards smoothness and uniformity of motion, as well as increased economy of fuel.

Plate XIX., Figs. 2 and 3, are copies of indicator diagrams of this engine taken before and after the alteration described, and from which the pressures on the piston, in the third columns of the preceding tables, are obtained. It should be remarked, in explanation of these diagrams, that since it is the combined actions of steam and vacuum occurring simultaneously at the given point of the stroke that we require to ascertain, the ordinates must be measured from the steam line A B of the diagram, taken from one side of the piston to the vacuum line C D belonging to the diagram of the other side of the piston. The dotted line at C D represents the vacuum side of the single diagram, to show its complete form in these two figures, but is omitted in the subsequent ones to prevent

confusion. This explanation is necessary, as the unusual shape of the diagrams might otherwise appear strange to those in the habit of using the indicator. The dotted line E F is obtained by taking ordinates measured from the steam line A B, corresponding with the minus and plus forces in the second columns of the tables, and consequently the distances from the line E F to the vacuum line C D represent the actual pressures on the crank-pin.

In the two cases considered the working power of the engine was nearly equal, being 135 horse power in the first instance, and 152 in the latter, the difference of the power being due to an increase in the quantity of machinery set to work in the mill during the interval between the taking of the two diagrams.

We will now investigate the circumstances attending the case when the same engine was working under a very light load, using for our purpose a diagram taken before the valves were altered, and showing an indicated power of 24 horses. Our formula gives the numbers contained in Table III., and the diagram corresponding is shown in Fig. 4, Plate XIX.

TABLE III., FIG. 4.

Proportional parts of the stroke	Value of f by formula	Pressure on the piston	Pressure on the crank
	lb.	lb.	lb.
·0	−7,600	3,960	−3,640
·1	−6,080	3,168	−2,912
·2	−4,560	2,574	−1,986
·3	−3,040	2,376	− 664
·4	−1,520	2,079	559
·5	0	1,980	1,980
·6	+1,520	1,980	3,500
·7	+3,040	1,980	5,020
·8	+4,560	1,881	6,441
·9	+6,080	1,782	7,862

Inspection of the last column in this table shows us that no part of the pressure on the piston reached the crank until one-third of the stroke was performed, it being, for the time,

entirely absorbed in overcoming the inertia of the reciprocating parts of the engine. We see, further, that of itself the pressure on the piston was not sufficiently powerful to produce that effect, the negative signs showing that the crank, instead of receiving an impulse from the connecting-rod during the first third of the stroke, it had actually to assist in putting the oscillating parts into motion, the necessary force for this purpose being abstracted from the previously-acquired momentum of the fly-wheel.

At the time the last described diagram was taken, although the only work performed was giving motion to the mill shafting, the engine and gearing worked more roughly than they did subsequently, with the altered valves, when the whole machinery of the mill was driven. A comparison of the fourth columns in the two last tables will account satisfactorily for this fact.

We may now proceed to investigate the case of a compound cylinder engine, in which the larger cylinder is 48 in. diameter and 7 ft. stroke, and the smaller one 40 in. diameter and 3½ ft. stroke. Number of strokes per minute, 22. Reduced weight of the reciprocating parts, 19,000 lbs. The results are given in Table IV.

TABLE IV., FIG. 5.

Proportional parts of the stroke	Value of f by formula	Pressure on the piston	Pressure on the crank
	lb.	lb.	lb.
·0	−9,576	18,000	8,424
·1	−7,660	23,220	15,560
·2	−5,745	23,040	17,295
·3	−3,830	22,680	18,850
·4	−1,915	21,780	19,865
·5	0	21,240	21,240
·6	+1,915	20,160	22,075
·7	+3,830	19,440	23,270
·8	+5,745	18,900	24,645
·9	+7,660	17,640	25,300

The numbers in the third column of this table show the combined effect of the two cylinders, that of the small one being reduced to its equivalent power acting on the larger piston. In glancing the eye down the fourth column we observe the pressure on the crank-pin increasing as the stroke proceeds, till, at the end, it reaches fully three times the amount of the commencing pressure. Fig. 5 is a copy of the diagrams taken from the high and low-pressure cylinders of this engine. The same letters of reference and remarks thereon apply to this as to Figs. 2 and 3.

In the example last described the large cylinder has three times the content of the smaller one, and since the steam is cut off at three-fourths of the stroke in the latter, the total ratio of expansion is four to one. We may now compare with it an example with a single cylinder having the same amount of expansion, selecting as an instance an engine having a cylinder 32 in. diameter, 5 ft. length of stroke, and moving at the rate of thirty-two strokes per minute. Reduced value of w equal 5,863 lb. The calculated results are displayed in Table V.

TABLE V., FIG. 6.

Proportional parts of the stroke	Value of f by formula	Pressure on the piston	Pressure on the crank
	lb.	lb.	lb.
·0	−5,140	20,000	14,860
·1	−4,112	21,200	17,088
·2	−3,084	21,680	18,596
·3	−2,056	18,400	16,344
·4	−1,028	13,920	12,892
·5	0	10,800	10,800
·6	+1,023	8,800	9,828
·7	+2,056	7,600	9,656
·8	+3,084	6,560	9,644
·9	+4,112	5,840	9,952

In this case the influence of inertia is not sufficient to counterpoise entirely the diminishing pressure on the piston arising from expansion. Still it contrasts very favourably

with the previous example with the double cylinder, the pressures on the crank-pin being a much nearer approach to uniformity in this case than in that. Besides, it seems consistent with common sense that if a difference of force is unavoidable, it is better to have the excess towards the commencement of the stroke, where the work to be accomplished is all before it, rather than delaying it to the last of the stroke when its work should be about terminating. At all events, a lengthened experience has failed to discover to the author a single instance in which a deleterious action was traceable to the first of these conditions.

Plate XIX., Fig. 6, is a copy of the diagram taken from this engine.

In each of the foregoing, being examples of beam engines, the weight of the reciprocating parts is very considerable, and it may be considered interesting to examine the effect of inertia in a direct-acting engine, in which the moving weights are reduced to a minimum. With this object we may instance a locomotive engine, having cylinders 14 in. diameter, 18 in. stroke, 5 ft. 6 in. driving-wheels, and running at the rate of thirty-five miles per hour, or 178 revolutions of the wheels per minute, the value of w being 375 lb. Table VI. contains the results.

TABLE VI., FIG. 7.

Proportional parts of the stroke	Value of f by formula	Pressure on the piston	Pressure on the crank
	lb.	lb.	lb.
·0	−3,050	5,852	2,801
·1	−2,441	6,160	3,719
·2	−1,831	6,314	4,483
·3	−1,220	6,160	4,940
·4	− 610	5,544	4,934
·5	0	4,158	4,158
·6	+ 610	3,172	3,782
·7	+1,220	2,417	3,637
·8	+1,831	1,848	3,679
·9	+2,441	924	3,365

The last column in this table shows a remarkable approximation to uniformity, considering the great disparity of pressure on the piston, as seen in the third column, the light weight of the moving parts being compensated by their high velocity.

The diagram, Fig. 7, from which the numbers in the table are calculated, unlike the previous ones, is not obtained directly by the indicator, but is the result of estimation founded on another diagram taken with an engine running at thirty-five miles per hour without a train. The pressures given in that (reckoned from zero or perfect vacuum) were multiplied by such a co-efficient as would make the mean effective pressure equivalent to the resistance of a train of six carriages in addition to the engine. It is presumed that the diagram, thus obtained, is similar to what the same engine would have produced if attached to the train. It certainly would have been more satisfactory to have used an unchanged indication; but the author has not been able to obtain one from an engine with a useful load, in connexion with which the weights of the moving parts of the engine were known.

There is an irregularity of a different character to what we have been discussing, to which all engines are more or less prone if under the control of a governor, and the load is variable.

When the engine is performing its customary work, should a portion of the machinery be thrown off, an acceleration of speed will ensue, tending to make the governor arms expand; but, owing to the inertia of the governor balls, it takes a sensible time to fully develop their proper action, and the speed of the engine meanwhile is still on the increase. The consequence of this is, that at length the governor shuts off the steam to a greater degree than the wants of the engine demand, and the speed of the engine falls below the normal state. By the repetition of the same cause the governor again admits too much steam, and thus a series of fluctuations of speed is the result; until at last, after a number of

gradually reducing oscillations, the engine settles into its regular pace.

This perturbation is technically known as "riding," and it is an observed fact, that an engine with a high degree of expansion is more liable to it than one working under uniform pressure. The cause is not difficult to trace. During the period that expansion is proceeding, the communication between the boiler and the cylinder is totally cut off; and in this interval, let the governor change as it may, it cannot exert any influence whatever on the admission of steam to the cylinder until the commencement of the succeeding stroke. Thus the action of the governor, which from inertia is of necessity always in arrear, is much more so in the present case. If the engine is one with combined cylinders, this discursive action becomes greatly aggravated, for not only does an excess or deficiency of steam exert the specific effect in the first cylinder, as just described, but that effect is transferred, together with the steam, to the larger cylinder, and continues in force during the whole of the returning stroke.

A noteworthy corollary may be deduced from one of the steps in our previous analysis. Returning to equation E,

$$f' = \cdot 00034\, n^2 w' y.$$

In this expression, it will be recollected, f' was the force due to the lateral momentum of the connecting rod applied at its end. If we now refer this force to a point in the centre of length of the rod, it would be doubled in amount by leverage; and, as it was found that w' was approximately one-third of the weight of the rod, it would now amount to two-thirds. Action and reaction being equal, this formula also represents the force applied transversely to the rod, tending to break it in the centre. Making use of the formula, and recollecting it is at a maximum when y equals the radius of the crank, we obtain from the first example, in which two-thirds the weight of the connecting rod is 2,390 lb.,

$$f = \cdot 00034 \times 900 \times 2390 \times 3 = 2{,}194 \text{ lb.}$$

Thus the lateral swing of the connecting rod, in this instance, produces a tranverse strain of nearly a ton in the middle of the rod; teaching that the cross section of the rod, instead of being equal in breadth and depth, it should be deepest in the direction of its vibrations, especially with the modern practice of running engines at higher velocities than formerly. There can be little doubt it is to this effect of inertia is to be ascribed the tremor frequently observed in the connecting rod of a large engine at the middle of its stroke, it being at this point the reversal of the force occurs.

It is beyond the scope of this paper to enter into any analysis of the relative economy of single and combined cylinders, otherwise it would not be difficult to demonstrate that, with theoretically perfect engines of each kind, they are exactly equal in this point with equal degrees of expansion—the ratio of economy being represented by unity added to the hyperbolic logarithm of the number of times the steam is expanded. Perfection, however, is a thing beyond our grasp, and practically it will be found that the balance in imperfections is against the compound system, in the shape of additional friction, extra loss of heat by radiation, increased leakage from the greater number of steam-joints, and loss of pressure arising from the connecting space between the two cylinders. This last item is a greater source of loss than is generally imagined; for if it did not exist the initial pressure in the larger cylinder would be the same as the final pressure on the smaller one. But if we examine the diagram No. 3, which is a fair specimen of its class, we find the pressure of steam at the end of the stroke in the small cylinder is 23 lb. per inch, whereas at the commencement in the large cylinder it is only 11½ lb., reckoning both from zero or perfect vacuum.

Although these disadvantages are to be charged to the compound system, they do not supply any valid argument against the adoption of the excellent arrangement of M'Naught,

when it is wished to apply expansion to an engine already existing, and the parts of the engine are found to be insufficiently strong to bear the necessary increased pressure with the single cylinder. But, on the other hand, this does not grant the propriety of constructing a new engine on that principle, inasmuch as the weight of the metal required to make the small cylinder and its appendages would be amply sufficient to sustain the increased pressure, if employed in adding to the strength of the working parts of the engine, and would be attended with no additional cost beyond that of the raw material.

It is difficult to convince those who have had engines altered by the addition of the second cylinder, that it is quite possible to produce fully as good economical results with a single cylinder. They say, "We found a great saving when we adopted the high-pressure cylinder, and therefore it is of no use arguing in favour of the single cylinder, because we have tried both plans." This reasoning is fallacious, in consequence of the comparison being founded on erroneous data. They have used the single cylinder without expansion, and contrasted that with the result of the compound system, which of necessity, involves a large amount of expansion.

In instituting a comparison between different engines we should be careful they stand on the same footing in all the requisite conditions, except those we wish to test. For instance, if we compare two cases in which the engines and the boilers both differ, we cannot assign what is due to the engine and what to the boiler. It is not fair to compare a large engine with a much smaller one—the former having the advantage in being subject to a less ratio of friction and surface radiation; neither is it fair to compare two engines of which one has regular or long continued work, and the other is worked intermittently. Again we cannot make a just comparison between an engine employed in driving a corn-mill

and one driving a flax spinning-mill. The first usually works without intermission through day and night, whereas the flax-mill must stand idle in the night and twice in the course of the day, at meal hours, during which time the boilers are losing heat; beside which, a very large but indefinite quantity of the steam generated by the boiler is employed in heating the spinning troughs of the mill.

In the two examples described in Tables IV. and V. all the controlling circumstances were so nearly identical that they afford an opportunity, such as is seldom met with, for testing the relative merits in economy of single and compound cylinders. In both instances the engines were connected with flax spinning-mills—both had boilers of the same number, construction, and dimensions—both had the same amount of expansion—and the same quality of coals (Hard Ayr) was used for both. In the case with the compound cylinder, the indicated power was 176 horses, and the average weekly consumption 40 tons. In the other example, in which two engines worked in conjunction, the indicated power was 245 horses, with average weekly consumption of 33 tons. This is by no means an insulated case in favour of the single cylinder; but the author has never met with an opportunity of comparing the two systems in which the terms of competition were so fairly balanced.

It is a significant fact, in confirmation of the views entertained in this paper, that in Cornwall, where the double cylinder system first originated, and where the strictest attention is paid to every point conducing to the economical working of the steam engine, the extra cylinder has long been discarded; and the author has been credibly informed that a double-cylinder engine has not been for many years erected in that county.

In conclusion, it is not pretended that the present paper contains any remarkably original thought, and possibly the

style of development may appear crude and inelegant to abler and more disciplined minds. Some of the conclusions arrived at are confessedly at variance with received opinions; and in advancing them an apology is perhaps due on the part of one in the author's position. In thus doing he would, with reverence, quote the words of a veteran writer* of the present day, penned under somewhat similar circumstances:—"To differ from many who have higher claims as public instructors may doubtless appear presumptuous. In these days, however, no writer, whatever may be his standing, can expect that his mere *ipse dixit* should dispense with further inquiry. There are now no secrets in chemistry or philosophy. The highways of science are open to all, and the laws of nature are equally accessible to all." . . . "We no longer live in a Galilean age. Public opinion and judgment can no longer be controlled by an uninquiring submission to supposed authority, or be dictated to by the unreasoning censure of custom."

* C. W. Williams, Esq.

APPENDIX.

In the course of the discussion that ensued upon the reading of the foregoing paper, Mr. Anderson, Member, said he had frequently observed a fact, which appeared to him to involve the force illustrated in the paper just read. It would be familiar to every one in the habit of using a foot-lathe, in which the treadle is suspended from the crank by a hooked connecting rod, if the treadle is worked briskly and then the foot removed, a violent jumping of the hook upon the crank is the consequence. The cause of this, he conceived, to be the inertia of the treadle being greater than the accelerative force of gravity can overcome sufficiently quick to keep pace with the crank. With a view to examine the nature of the curve described in the jump, he had lately fixed a pencil to the side of the hook, and after causing the crank to revolve at such a velocity as to produce the jump, he brought a sheet of paper in contact with the pencil, and allowed it to trace its own curve. The curve thus generated in jumping is shown by the dotted line in Fig. 8 (Plate XVIII.), the circle being the path of the hook when working in contact with the crank. At A is the point at which the jump commences, and at B is the point where the hook again falls upon the crank, the direction of motion being as shown by the arrow.

As the investigation of the fact described by Mr. Anderson, produces results confirming the accuracy of the views entertained in the preceding paper, the following analysis may be deemed interesting, especially as frequent opportunities occur for its practical application to machinery.

There are two different conceivable cases in which the jumping may be produced. Firstly, the crank in its downward motion, may descend faster than the accelerating force

of gravity can cause the moving weights to fall, and the crank will run away from the hook. Secondly, the moving weights in ascending, may lose their velocity under the retarding influence of gravity, at a slower rate than the crank does in rising, and then the hook will run away from the crank. The second of these conditions, however, is the only one which practically comes into operation; because, being the first met with by the crank in its path, if the velocity is sufficiently great to cause the hook to leave the crank, the other condition becomes superseded.

In proceeding to analyse the subject we will assume, for the sake of simplicity, that the motion of the crank is perfectly uniform—that the connecting rod is of indefinite length—and that the centre of gyration of the treadle is at the point where the connecting rod is jointed to it.

In the diagram, Plate XVIII., Fig. 9, A, B, C, D, represents the path of the crank, the direction of motion being as indicated by the arrow, and the dotted line B, C, is the curve traced by the hook in jumping.

Let r = Radius of crank circle;
x = Cosine ,, ,,
y = Sine ,, ,,
z = Versed sine ,, ,,
s = Height of the leap of the hook;
V = Velocity of the crank in the circle;
$v_{,}$ = Velocity of the crank in a vertical direction;
v = Velocity of the hook in a vertical direction;
n = Number of revolutions per minute;
w and f = Weight and accelerating force.

All dimensions being in feet, and velocities in feet per second.

By the laws of falling bodies

$$v^2 = \frac{64{\cdot}38f}{w} s$$

And from the nature of motion in a circle

$$V : v_{,} :: r : y$$

therefore $$v_{,} = \frac{Vy}{r} \text{ and } v_{,}^2 = \frac{V^2y^2}{r^2} \qquad \text{G}$$

But $$V = \frac{3{\cdot}1416 \times 2r \times n}{60}$$

therefore $$V^2 = {\cdot}011\, r^2n^2$$

and by the circle, $y^2 = 2rz - z^2$

Substituting these values of V^2 and y^2 in equation G

$$v_{,}^2 = \frac{{\cdot}011\, r^2n^2\,(2rz - z^2)}{r^2} = {\cdot}011\, n^2\,(2rz - z^2) \qquad \text{H}$$

At the point of departure of the hook from the crank, the velocity of the hook under the influence of gravity is equal to the vertical velocity of the crank; therefore, equating v^2 and $v_{,}^2$ in equations F and H

$$\frac{64{\cdot}38f}{w}s = {\cdot}011\, n^2\,(2rz - z^2)$$

or, $$\frac{5872f}{n^2w}s = 2rz - z^2 \qquad \text{I}$$

Differentiating this equation

$$\frac{5872f}{n^2w}.ds = (2r - 2z).dz$$

But at the point of departure the decrement of s equals that of z. Dividing, therefore, by $ds = dz$

$$\frac{5872f}{n^2w} = 2r - 2z$$

Hence, $$z = r - \frac{2936f}{n^2w} \qquad \text{J}$$

And since the versed sine equals the radius minus the cosine

$$z = r - x = r - \frac{2936f}{n^2w}$$

therefore, $$x = \frac{2936f}{n^2w} \qquad \text{K}$$

Thus we find that the point at which the jump commences is independent of the radius of the crank, and will, therefore,

be at a constant height above the centre with all lengths of crank, and any given number of revolutions per minute.

This point will always be above the centre, since x must have a positive value however great n may be.

From the last equation is obtained

$$n = \sqrt{\frac{2936f}{wx}} \qquad \text{L}$$

If in equation K we imagine n gradually to diminish, x will increase until it equals r, and then the jump will cease. By making, therefore, $x=r$ in equation L, we obtain the least velocity to produce jumping, or, in other words, the greatest velocity free from jumping.

$$n_{,} = \sqrt{\frac{2936f}{wr}} \qquad \text{M}$$

Returning to equation K, we derive from it

$$f = \frac{xn^2w}{2936} \qquad \text{N}$$

Thus the force varies directly as the distance x, as shown in the previous investigation "On the Influence of Inertia in the Steam-Engine," and by taking the reciprocal of 2936 we obtain

$$f = \cdot 00034\, xn^2w$$

identical with the result arrived at in that analysis.

Referring to equation M, giving the maximum number of revolutions per minute the crank can run at without throwing off the hook, we find it will apply also to the case of a whirling weight attached to a flexible cord, and it gives the least velocity that will keep the cord extended throughout the whole rotation. But looking at this from another point of view, it is evident that the cord is kept extended by *centrifugal force;* and since the force f acts radially at the apex of the circle (where x equals r), these two forces should coincide in value at that point. Accordingly making $x = r$ in equation

N, is obtained

$$f_{\prime} = \frac{rn^2w}{2936} = \cdot 00034\, rn^2w \qquad \text{O}$$

the well-known formula for calculating centrifugal force; thus again demonstrating the correctness of the preceding analysis.

MEMOIR

OF

BARRY DUNCAN GIBBONS,

LATE VICE-PRESIDENT I.C.E. OF IRELAND.

THE subject of this brief memoir furnishes an instance, amongst many, of natural aptitude supplying the place of regular professional training. Bred to commercial pursuits, he soon abandoned them for the more congenial study of civil engineering, and commenced his professional career, in 1828, in superintending an addition to the pier of Kilrush, built there by the Fishery Board, from the design of Mr. Alexander Nimmo. The upright construction of the walls being the only noteworthy point of the structure, which, owing to the sheltered nature of its position, is not likely to afford a test, as often asserted, of the supposed advantages of that mode of building in exposed situations. On the completion of that work he was appointed, in 1832, by the Board of Public Works, which was formed in that year, as resident engineer of Dunmore Harbour, previously constructed under the direction of Mr. Alexander Nimmo, but then undergoing repairs on account of the extensive breaking up of the sea pavement, owing to the insufficiency of the base given to the back of the mole.

On the passing of the Grand Jury Act, in 1834, authorizing the appointment of County Surveyors, whose competency was to be tested by examination, Mr Gibbons obtained that office for the county of Wexford, and held it with credit until 1838, when he succeeded, on the death of Mr. Thomas, to the position of resident engineer of Kingstown Harbour, holding

at the same time a similar appointment on the Kingstown Railway. It was in connexion with this company, as promoters of the extension of their line to Dalkey on the atmospheric principle that he was first brought into public notice, having been several times examined before Committees of the House of Commons with reference to the construction and working of the line completed under his direction, with the assistance of the patentees, the Messrs. Samuda. The failure of the project on economic grounds, after several years of continuous operation, detracts nothing from the ingenuity and skill brought to bear on the practical adaptation of the invention. On the extension of the railway, in 1856, from Dalkey to Wicklow, on the survey of which Mr. Gibbons was engaged under Mr. Brunell, the atmospheric system was given up as less sure and effective than locomotive propulsion.

In the year 1846 the Act of the 9th Vict., c. 3, having been passed allocating £50,000 for the construction of fishery piers and harbours, as a source of employment, and enabling food to be procured at a period of severe distress, Mr. Gibbons was appointed, with an increase of salary, to direct the expenditure of that amount, as well as of a further sum of £40,000 allocated for similar purposes in 1847. Under these provisions upwards of forty different works were begun, consisting of piers, harbours, breakwaters, boat-slips, and docks, the execution of which extended over a period of about six years, involving an outlay of upwards of £100,000, three-fourths of that amount having been granted by Government, and the remainder advanced from the same source, in the first instance to be repaid by county presentments and individual contribution. The principal piers executed were those of Newcastle, county Down; Kilmore and Duncannon, county Wexford; and Moville, county Donegal. These works, constructed in exposed and difficult situations, bear testimony, by their permanence and success, to the judgement which was brought to bear on

the selection of the sites, as well as on the mode of their construction. The foundations of the piers were effectively laid, without the expense of staging, by means of the diving helmet. The Belmullet Canal may also be mentioned as an instance of another description of work. It connects the bays of Blacksod and Broad Haven, saving a circuitous voyage on an exposed and dangerous coast. The land communication is kept up by a swivel bridge, 50 feet in breadth. This work was completed at a cost of £8,319.

The most important works designed by Mr. Gibbons were the internal piers in connexion with Kingstown Harbour, namely, the Traders' Wharf and the New Packet Pier; the former, enclosing a larger area than the old pier of Dunleary, at the south-western angle of the harbour, was commenced in 1842, and completed within three years, at a cost of £30,000.

With reference to the packet pier much discussion took place—the site selected by Mr. Gibbons in the south-eastern angle of the harbour, parallel to, and 450 feet distant from, the breakwater, having been objected to by Mr. Rendel, Engineer to the Admiralty, on the ground that the area included was too confined, being only 7¾ acres, of which less than one-half had only from 3 to 3½ fathoms at low water. Mr. Rendel recommended that the works in progress should be stopped, and that a pier should be substituted, extending from the north-eastern angle of the Victoria Landing Wharf, in an oblique direction, towards the eastern breakwater, enclosing 19 acres of sheltered basin, of which 11½ acres would have from 3 to 3½ fathoms, and affording the means of communicating with the Kingstown Railway by laying a road across the wharf.

The Commissioners of Public Works, having taken Mr. Rendel's suggestion into consideration, decided on not adopting it in preference to that already sanctioned, because the present Victoria Wharf would be rendered unavailable for the packets during the construction of the substituted design, and that too

large a space would be abstracted from the portion of the harbour required for refuge.

In consequence of this decision, Mr. Rendel was required, by the Lords of the Treasury, to review the whole condition of the harbour, and to report on, and design such works as in his opinion would render it perfectly safe for refuge, and thus take away the necessity for special works of protection for packets. With that view he proposed to extend the west breakwater, in the same direction as its last kant, for a length of 325 feet, so as to get rid of the disturbance in easterly gales, by directing the sea outwards on the back of the slope, instead of allowing it to run, as at present, along the inner face of the western wall. He also proposed to run off, from the inside of the head of the east breakwater, in a S.W. by W. direction, a spur for a length of 200 feet. These works would have the effect of diminishing the width of the entrance from 770 feet to 450, and of altering its aspect from N.N.E. to N.E. by N., being as near an approximation as altered circumstaces would permit to the original plan of the entrance, which was designed by Mr. Rennie to be 430 feet in width. The harbour being thus rendered tranquil, he proposed to convert about 800 feet of the east breakwater into a wharf, by driving rows of creasoted piles in advance, and parallel to the stone slope, in from 18 to 22 feet of water, at low water, and to make it of sufficient breadth for two lines of railway, leaving the present road as a carriage and footway. To the northward of this wharf, for ordinary traffic, he proposed to moor a floating stage or pontoon, devoted exclusively to the accommodation of mail and passenger traffic. The railway was to be extended from Kingstown to a station to be erected opposite the pontoon. The estimate for these works, including the protection of the entrance, was £167,000.

The investigation of these important matters having been considered by the Lords of the Admiralty to be a fit subject for

special inquiry, Captains Kellet and Frazer, R.N., were pointed commissioners for that purpose; and they having their court in Kingstown, and examined witnesses, declared weight of evidence to be against narrowing the entrance, they recommended the resumption of the works, which been stopped for nearly twelve months, in 1854–55, confirming the correctness of Mr. Gibbons' views—a res considered to be no small tribute to his reputation, in co petition with so high an authority as Mr. Rendel. The p was completed in 1858, at a cost of 63,000. It is 747 feet length, and 64 feet 6 inches in width. Its average height 41 feet, with 23 feet of water at its head, at low water spring tides.

In 1857 Mr. Gibbons was offered the appointment engineer to the Dublin and Wicklow Railway Company but not having felt himself at liberty to accept it withou the sanction of the Commissioners of Public Works, h was informed that the continuance of his services in the department was desirable, and he was accordingly, from that period, placed on the permanent establishment as principal engineer to the Board, the duties of which important office he continued to discharge, with credit to himself and advantage to the service, up to his decease, at the close of 1862, leaving his numerous works as the best memorials of his professional attainments.

M. BERNARD MULLINS.

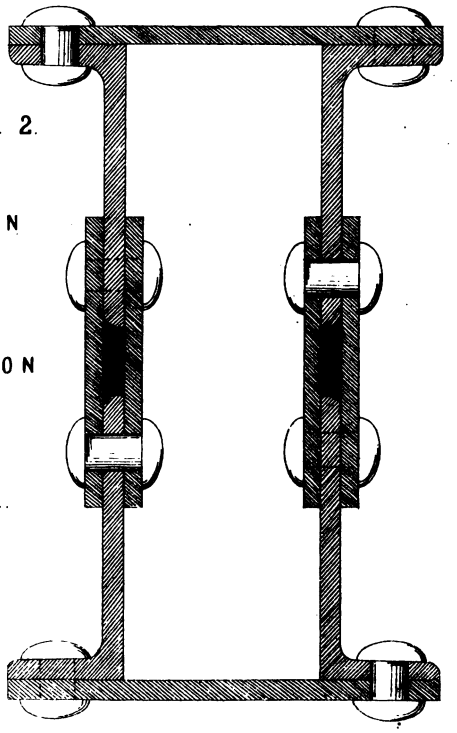

FIG. 2.

SECTION OF COMPRESSION BEAM ¼ SIZE.

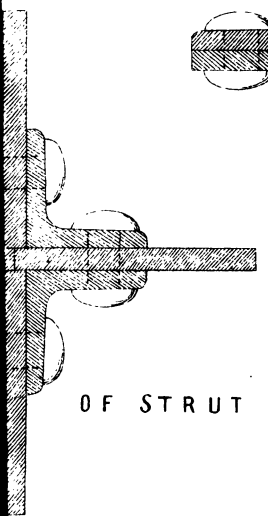

OF STRUT

E. J. Harty lith. 29. Dame St. Dublin.

THE NEW YORK
PUBLIC LIBRARY
ASTOR LENOX
TILDEN FOUNDATIONS

THRO' JOINT IN TENSION BAR.

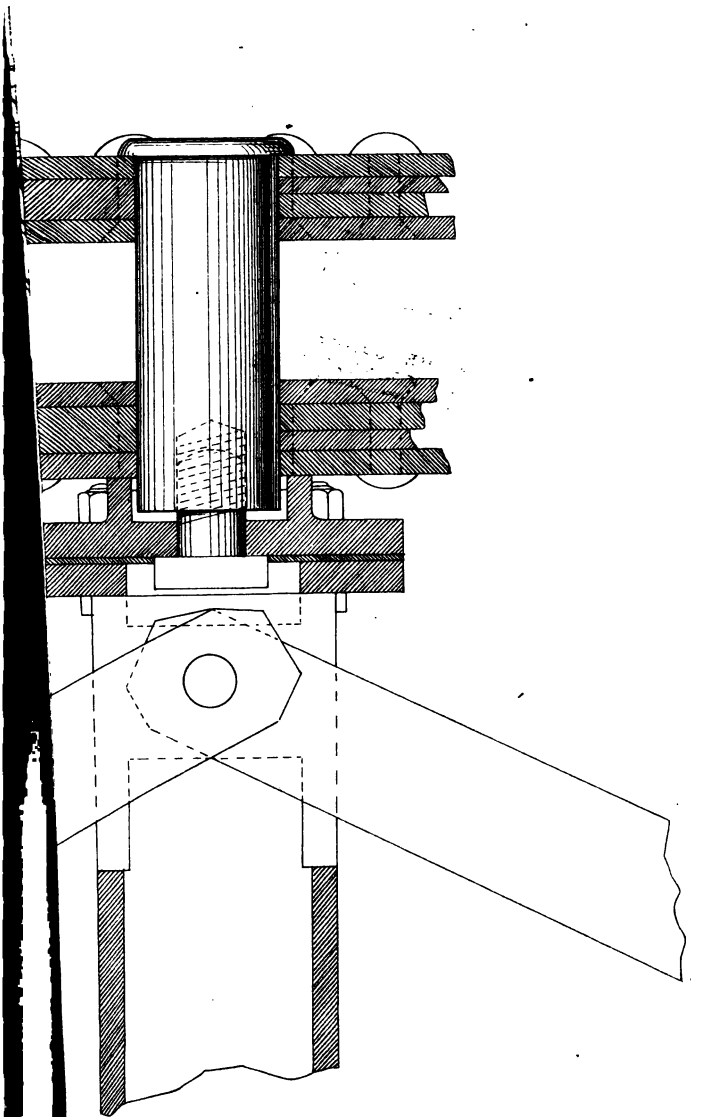

F. J. Harty lith. 29 Dame St. Dublin

THE NEW YORK
PUBLIC LIBRARY
ASTOR, LENOX
TILDEN FOUNDATIONS

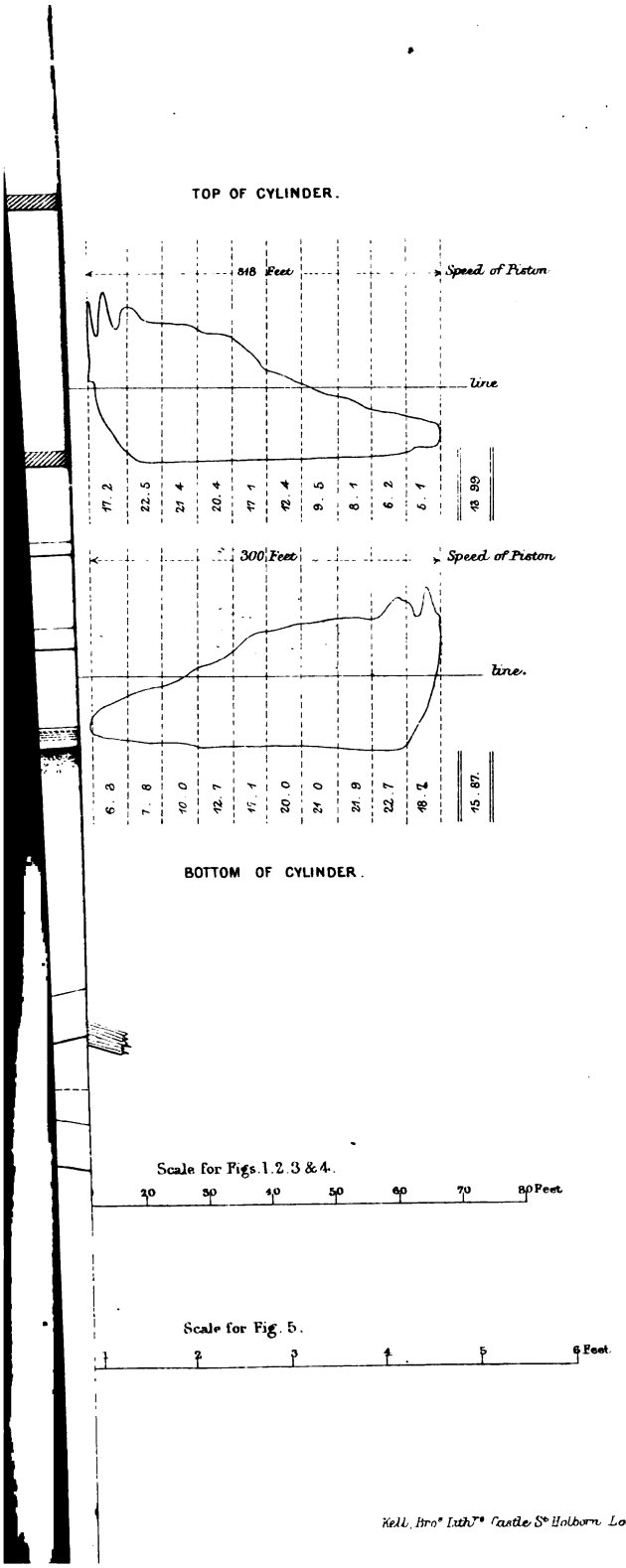

Kell, Bros Lithrs Castle St Holborn London.

NEW YORK
PUBLIC LIBRARY
ASTOR, LENOX
TILDEN FOUNDATIONS

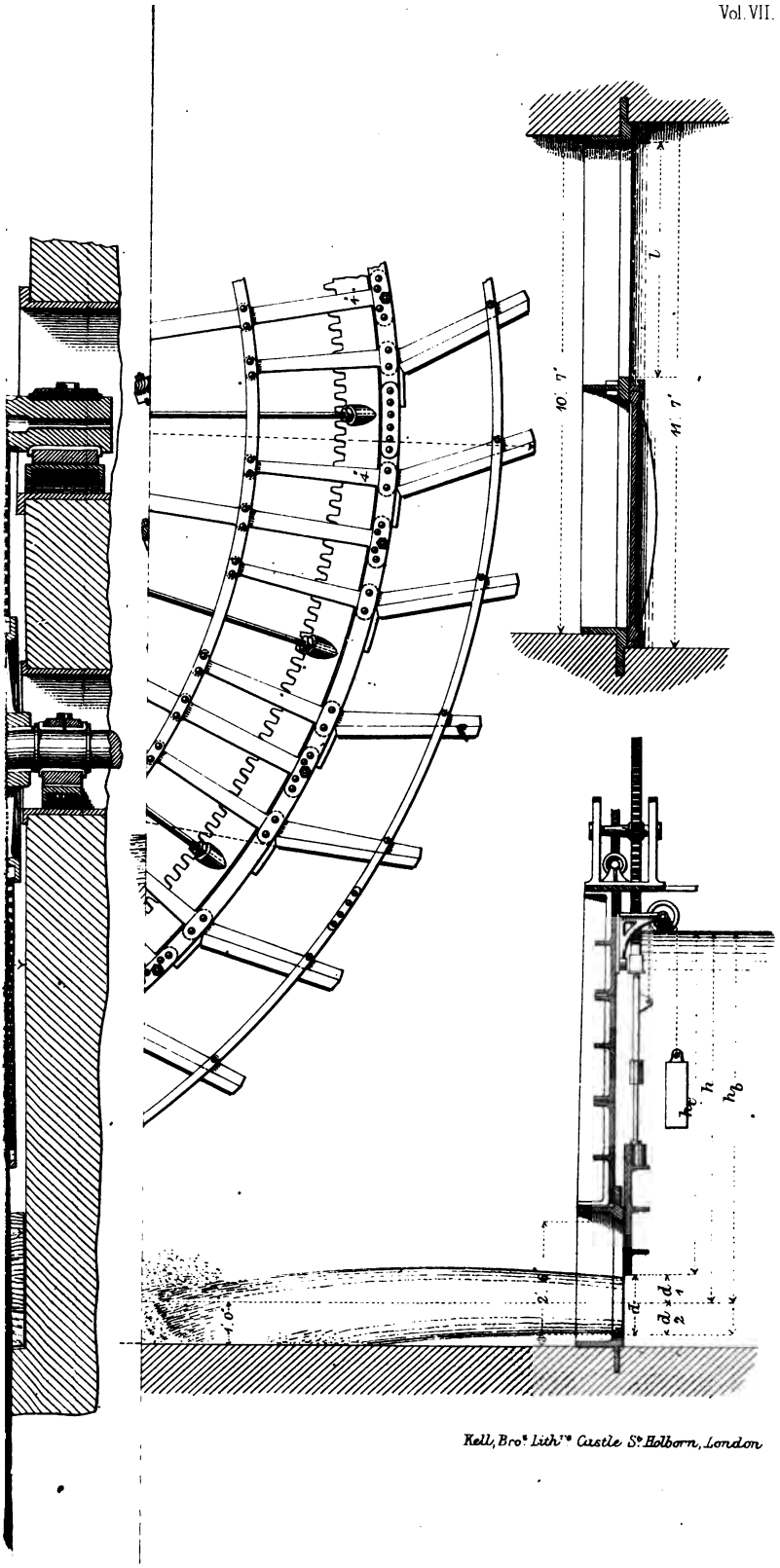

Kell, Bros. Lith.rs Castle St. Holborn, London

NEW YORK
PUBLIC LIBRARY
ASTOR, LENOX
TILDEN FOUNDATIONS

Kell, Bros. Lith.rs Castle St. Holborn, London

ASTOR, LENOX
TILDEN FOUN

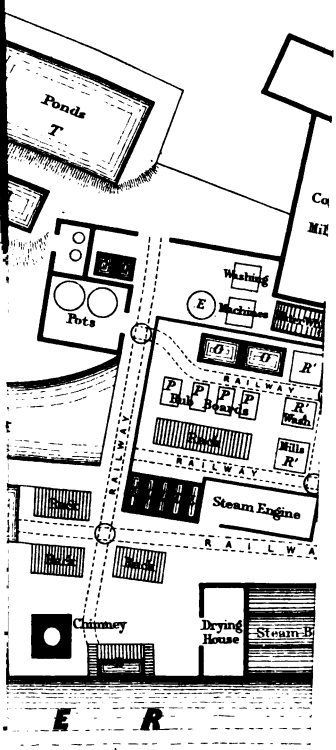

Scale, 40 Feet to One Inch

THE NEW YORK
PUBLIC LIBRARY
ASTOR, LENOX
TILDEN FOUNDATIONS

IEW OF

NEW YORK
BLIC LIBRARY
ASTOR, LENOX
TILDEN FOUNDATIONS

Fig. 3.

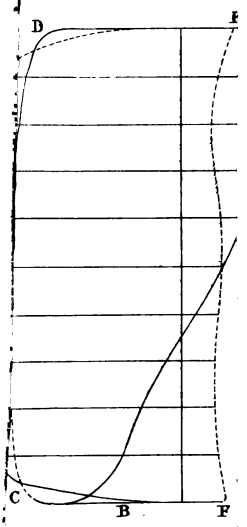

Fig

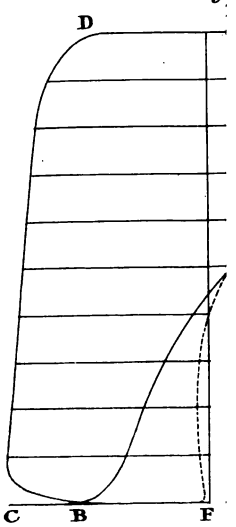

THE NEW YORK PUBLIC LIBRARY
REFERENCE DEPARTMENT

This book is under no circumstances to be taken from the Building

Form 410